# INSTALLER'S GUIDE
# CONDENSING UNITS

Split System Air Conditioner
1.5-5 Tons R410a
13.4 SEER2
R410a

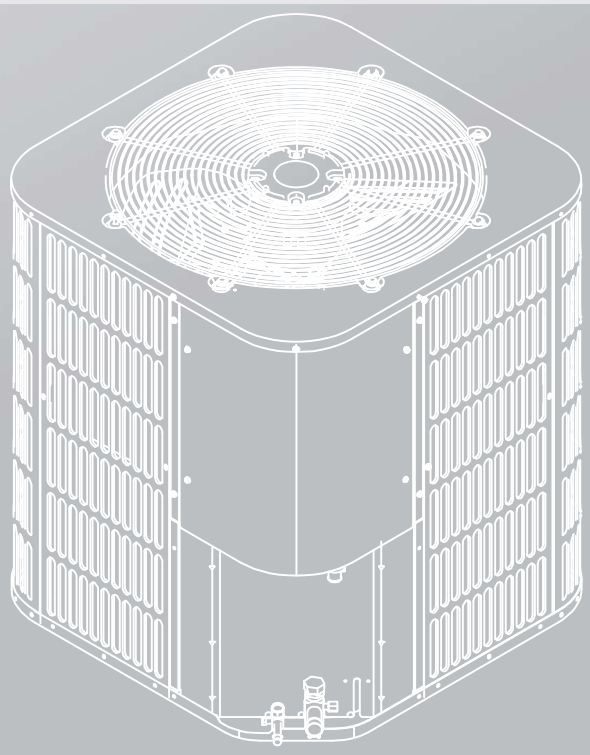

Thank you very much for purchasing our product.
Before using your unit, please read this manual carefully and keep it for future reference.
The figure shown in this manual is for reference only and may be slightly different from the actual product.

RECOGNIZE THIS SYMBOL AS AN INDICATION OF IMPORTANT SAFETY INFORMATION

**⚠ WARNING**

These instructions are intended as an aid to qualified licensed service personnel for proper installation, adjustment and operation of this unit. Read these instructions thoroughly before attempting installation, or operation. Failure to follow these instructions may result in improper installation, adjustment, service, or maintenance possibly resulting in fire, electrical shock, property damage, personal injury, or death.

**⚠ WARNING**

This appliance is not intended for use by persons (including children) with reduced physical, sensory, or mental capabilities, or lack of experience and knowledge, unless they have been given supervision or instruction concerning use of the appliance by a person responsible for their safety. Children should be supervised to ensure that they do not play with the appliance.This unit is only used outdoor.

**⚠ WARNING**

This product can expose you to chemicals including lead, which are known to the state of California to cause cancer and birth defects or other reproductive harm. For more information go to www.p65Warnings.ca.gov

**NOTE**

The manufacturer recommends installing only approved matched indoor and outdoor systems. All of the manufacturer's split systems are AHRI rated .Some of the benefits of installing approved matched indoor and outdoor split systems are maximum efficiency, optimum performance, and the best overall system reliability.

# CONTENTS


## 1 KEY TO SYMBOLS AND SAFETY INSTRUCTIONS

- 1.1 Key to Symbols ..... 01
- 1.2 Safety ..... 01

## 2 UNIT LOCATION CONSIDERATIONS

- 2.1 Unit Dimensions ..... 02
- 2.2 Location Restrictions ..... 02

## 3 UNIT PREPARATION

- 3.1 Preinstallation ..... 03

## 4 SETTING UP THE UNIT

- 4.1 Pad Installation ..... 03

## 5 REFRIGERANT LINE CONSIDERATIONS

- 5.1 Service Valve Connection Sizes ..... 04
- 5.2 Refrigerant Line Sizes ..... 04
- 5.3 Refrigerant Piping Limits and Required Refrigerant Line Length ..... 04
- 5.4 Refrigerant Line Insulation ..... 04
- 5.5 Reuse Existing Refrigerant Lines ..... 05

## 6 REFRIGERANT LINE ROUTING

- 6.1 Precautions ..... 05

## 7 REFRIGERANT LINE BRAZING

- 7.1 Braze The Refrigerant Lines ..... 07

## 8 REFRIGERANT LINE LEAK CHECK

- 8.1 Check for Leaks ..... 08

## 9 EVACUATION

- 9.1 Evacuate the Refrigerant Lines and Indoor Coil ..... 08

## 10 SERVICE VALVES

- 10.1 Open the Service Valves ..... 09

## 11 ELECTRICAL - LOW VOLTAGE

- 11.1 Low Voltage Maximum Wire Length ..... 09
- 11.2 Low Voltage Hook-up Diagrams ..... 09

## 12 ELECTRICAL - HIGH VOLTAGE

- 12.1 High Voltage Power Supply ..... 11
- 12.2 High Voltage Disconnect Switch ..... 11
- 12.3 High Voltage Ground ..... 11

## 13 START UP

- 13.1 System Start Up ..... 12

## 14 SYSTEM CHARGE ADJUSTMENT

- 14.1 Charging: Weigh-In Method ..... 12
- 14.2 Suction Line Pressure Charging and Refrigerant Adjustment In Cooling (Above 55°F Outdoor Temp.) ..... 13

## 15 SYSTEM OPERATION AND TROUBLESHOOTING

- 15.1 Protection Function ..... 18
- 15.2 Temperature Sensor Resistance Table ..... 18
- 15.3 Electrical Data Table ..... 18
- 15.4 Troubleshooting Table ..... 19
- 15.5 Fault Code Table ..... 19

## 16 WARRANTY

- 16.1 Maintenance ..... 20
- 16.2 Removing and Installing The Cover Plate ..... 20
- 16.3 Changing Motor ..... 21

## 17 MATCHING TABLE AND CHECKOUT PROCEDURES

- 17.1 Operational and Checkout Procedures ..... 21

# 1 KEY TO SYMBOLS AND SAFETY INSTRUCTIONS

## 1.1 Key to Symbols

Warnings in this document are identified by a warning triangle. Keywords at the start of a warning indicate the type and seriousness of the ensuing risks arising from failure to take measures.

This symbol indicates important information where there is no risk to people or property.

The following keywords are defined and can be used in this document:

**DANGER** indicates a hazardous situation which, if not avoided, will result in death or serious injury.

**WARNING** indicates a hazardous situation which, if not avoided, could result in death or serious injury.

**CAUTION** indicates a hazardous situation which, if not avoided, could result in minor to moderate injury.

**NOTICE** is used to address practices not related to personal injury.

## 1.2 Safety

Important - This document contains a wiring diagram and service information. This is customer property and is to remain with this unit. Please return to service information pack upon completion of work.

**⚠ CAUTION**

This information is intended for use by individuals possessing adequate backgrounds of electrical and mechanical experience. Any attempt to repair a central air conditioning product may result in personal injury and/or property damage. The manufacturer or seller cannot be responsible for the interpretation of this information, nor can it assume any liability in connection with its use.

**⚠ WARNING**

**HAZARDOUS VOLTAGE!**

Failure to follow this warning could result in property damage, severe personal injury or death. Disconnect all electric power, including remote disconnects before servicing. Follow proper lockout/tagout procedures to ensure the power cannot be inadvertently energized.

**REFRIGERANT OIL!**

Any attempt to repair a central air conditioning product may result in property damage, severe personal injury, or death.

These units use R-410a refrigerant which operates at 50% to 70% higher pressures than R-22. Use only R-410a approved service equipments. Refrigerant cylinders are painted a “Rose” color to indicate the type of refrigerant and may contain a “dip” tube to allow for chargi-
ng of liquid refrigerant into the system. All R-410A systems use a POE oil (VG74 or equivalent) that readily absorbs moisture from the atmosphere. To limit this ‘hygroscopic“ action, the system should remain sealed whenever possible. If a system has been open to the atmosphere for more than 4 hours, the compressor oil must be replaced. Never break a vacuum with air and always change the driers when opening the system for component replacement.

**HIGH CURRENT LEAKAGE!**

Failure to follow this warning could result in property damage, severe personal injury, or death. Earth connection is essential before connecting electrical supply.

**SERVICE VALVES!**

Failure to follow this warning will result in abrupt release of system charge and may result in personal injury and/or property damage. Extreme caution should be exercised when opening the Liquid Line Service valve. Turn valve stem counterclockwise only until the stem contacts the rolled edge. No torque is required.

**BRAZING REQUIRED!**

Failure to inspect lines or use proper service tools may result in equipment damage or personal injury. If using existing refrigerant lines make certain that all joints are brazed, not soldered.

**⚠ CAUTION**

**CONTAINS REFRIGERANT!**

Failure to follow proper procedures can result in personal illness or injury or severe equipment damage. Systems contain oil and refrigerant under high pressure. Recover refrigerant to relieve pressure before opening a system.

**GROUNDING REQUIRED!**

Failure to inspect or use proper service tools may result in equipment damage or personal injury. Reconnect all grounding devices. All parts of this product that are capable of conducting electrical current are grounded. If grounding wires, screws, straps, clips, nuts, or washers used to complete a path to ground are removed for service, they must be returned to their original position and properly fastened.

**HOT SURFACE!**

May cause minor to severe burning. Failure to follow this caution could result in property damage or personal injury. Do not touch the top of the compressor.

# 2 UNIT LOCATION CONSIDERATIONS

## 2.1 Unit Dimensions

| Unit Dimensions | | | |
|---|---|---|---|
| Model | H(inches) | W(inches) | L(inches) |
| 18/24 | 24-15/16 | 23-5/8 | 23-5/8 |
| 30 | 24-15/16 | 28 | 28 |
| 36 | 24-15/16 | 29-1/8 | 29-1/8 |
| 42/48 | 33-3/16 | 28 | 28 |
| 60 | 33-3/16 | 29-1/8 | 29-1/8 |

Table 2-1

The unit's weight value is on the cardboard box.

When mounting the outdoor unit on a roof, be sure the roof will support the unit's weight. Properly selected isolation is recommended to prevent sound or vibration transmission to the building structure.

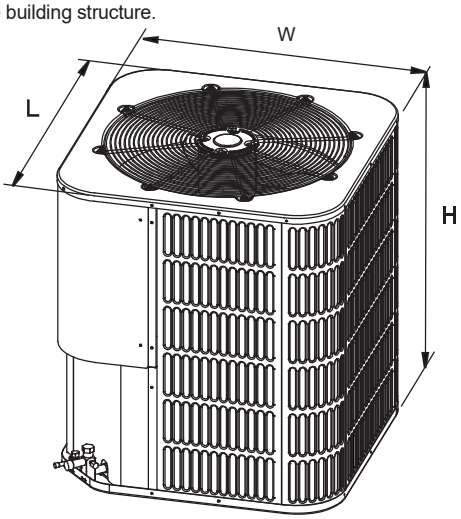


Figure 2-1

## 2.2 Location Restrictions

Ensure the top discharge area is unrestricted for at least 60 inches above the unit.

Do not locate outdoor unit near bedrooms since normal operational sounds may be objectionable.

Position unit to allow adequate space for unobstructed airflow, wiring, refrigerant lines, and serviceability.

Maintain a distance of 24 inches between units.

24 inches clearance must be provided in front of the control box (access panels) and any other side requiring service.

Position unit where water, snow or ice from roof or overhang cannot fall directly on unit.

Position the outdoor unit a minimum of 12" from any wall or surrounding shrubbery to ensure adequate airflow.

See Figure 2-2 and Figure 2-3

Cold climate considerations (heat pump only)

**NOTE**

Precautions must be taken for units being installed in areas where snow accumulation and prolonged below-freezing temperatures occur.

- Units should be elevated 3-12 inches above the pad or rooftop, depending on local weather. This additional height will allow drainage of snow and ice melted during defrost cycle prior to its refreezing. Ensure that drain holes in unit base pan are not obstructed, preventing drainage of defrost water (Fig. 2-4).
- If possible, avoid locations that are likely to accumulate snow drifts. If not possible, a snow drift barrier should be installed around the unit to prevent a build-up of snow on the sides of the unit.

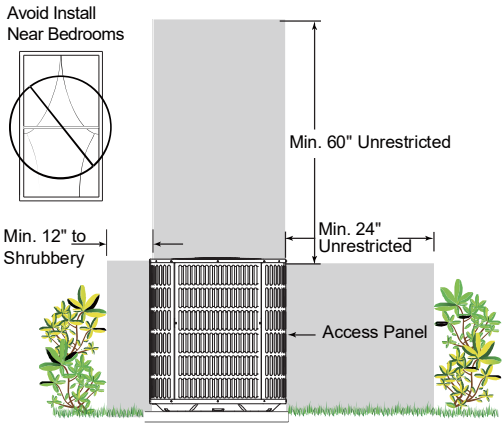


Figure 2-2

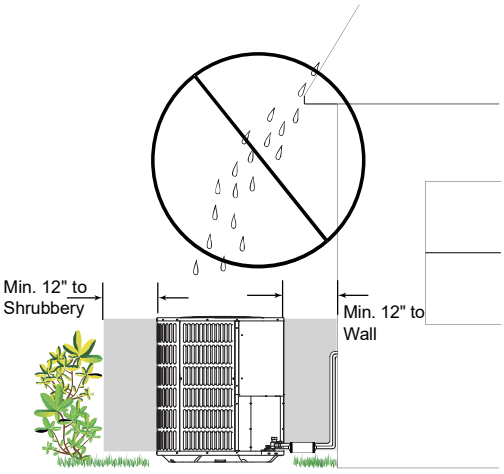


Figure 2-3

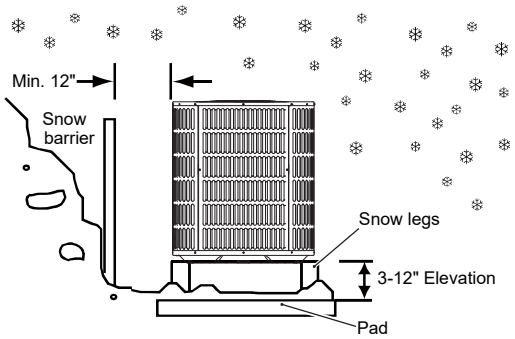


Figure 2-4

# 3 UNIT PREPARATION

## 3.1 Preinstallation

STEP 1 - Check for damage and report promptly to the carrier any damage found to the unit (Fig.3-1).

STEP 2 - Instruments must be designed to install/serve R410A equipments.

- Gauge sets, hoses, refrigerant containers and recov -ery system must be designed to handle the POE type oils.
- Manifold sets should be 800 PSIG high side and 250 PSIG low side.
- All hoses must have a 700 PSIG service pressure rating.
- Leak detectors should be designed to detect R410a.
- Recovery equipments (including refrigerant recovery containers) must be specifically designed to handle R410A.
- Do not use a R22 TXV.

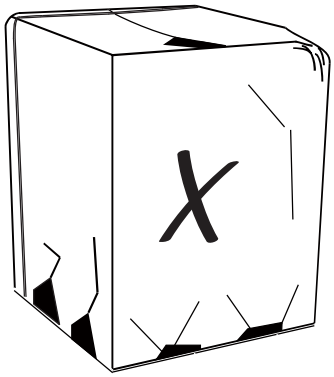

Figure 3-1

# 4 SETTING UP THE UNIT

## 4.1 Pad installation

When installing the unit on a support pad, such as a concrete slab, consider the following:

- The pad must be at least 1-2" larger than the unit on all sides.
- The pad must be separate from any structure.
- The pad must be level.
- The pad must be high enough above grade to allow for drainage.
- The pad location must comply with National, State and Local codes.

**NOTE**

These instructions are intended to provide a method to tie-down system to concrete slab as a securing procedure for high wind areas. Check Local Codes for tie-down methods and protocols.

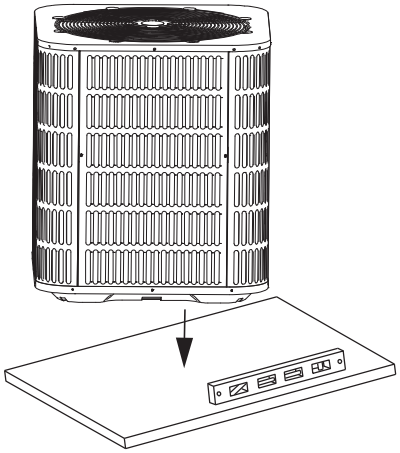

Figure 4-1

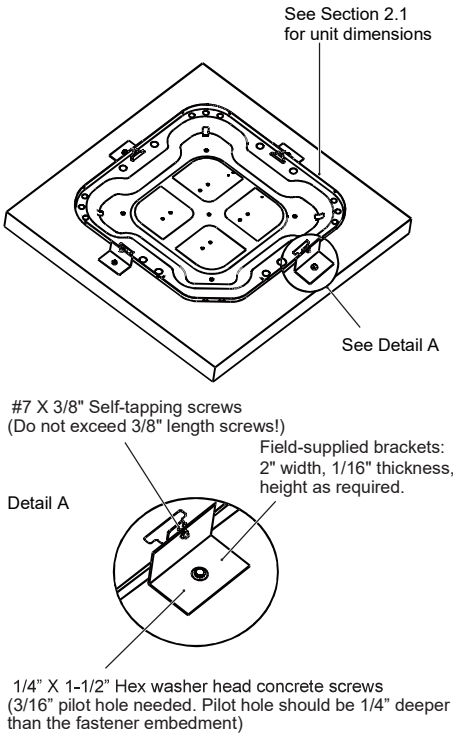


Figure 4-2

# 5 REFRIGERANT LINE CONSIDERATIONS

## 5.1 Service Valve Connection Sizes

| Models | Suction line connection | Liquid line connection |
|---|---|---|
| 18/24/30/36/42 | 3/4 | 3/8 |
| 48/60 | 7/8 | |

Table 5-1

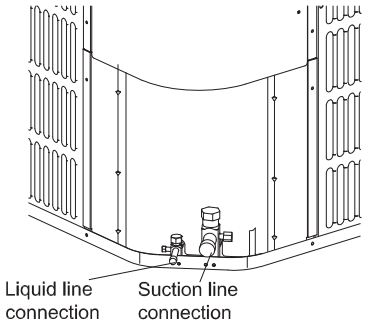


Figure 5-1

## 5.2 Refrigerant Line Sizes

| Models | Suction Line | | Liquid Line | |
|---|---|---|---|---|
| | optional | standard | optional | standard |
| 18/24/30/36/42 | 5/8 | 3/4 | 5/16 | 3/8 |
| 48 | 3/4 | 7/8 | 1/2 | |
| 60 | 7/8 | 1-1/8 | 1/2 | |

Table 5-2

## 5.3 Refrigerant Piping Limits And Required Refrigerant Line Length

| Model | Liquid line (inches) | Total equivalent length(Feet) | | | | | |
|---|---|---|---|---|---|---|---|
| | | 25 | 50 | 75 | 100 | 125 | 150 |
| | | Maximum vertical length(Feet) | | | | | |
| 18 | 5/16 | 25 | 50 | 40 | 30 | NA | NA |
| | 3/8 | 25 | 50 | 45 | 40 | NA | NA |
| 24 | 5/16 | 25 | 40 | 30 | 20 | NA | NA |
| | 3/8 | 25 | 50 | 45 | 40 | NA | NA |
| 30 | 5/16 | 25 | 40 | 40 | 30 | NA | NA |
| | 3/8 | 25 | 50 | 50 | 50 | NA | NA |
| 36 | 5/16 | 25 | 50 | 40 | 30 | NA | NA |
| | 3/8 | 25 | 50 | 50 | 50 | NA | NA |
| 42 | 5/16 | 25 | 23 | 4 | N/A | NA | NA |
| | 3/8 | 25 | 50 | 43 | 36 | 30 | 24 |
| 48 | 1/2 | 25 | 50 | 56 | 55 | 40 | 30 |
| | 3/8 | 25 | 46 | 38 | 30 | 22 | 15 |
| 60 | 1/2 | 25 | 50 | 60 | 60 | 40 | 30 |
| | 3/8 | 25 | 50 | 56 | 44 | 32 | 20 |

Table 5-3

| Model | Suction (inches) | Total suction line length | | | |
|---|---|---|---|---|---|
| | | 25 | 50 | 100 | 150 |
| | | Coefficient | | | |
| 18 | 5/8 | 1.00 | 0.97 | 0.94 | N/A |
| | 3/4 | 1.00 | 0.98 | 0.95 | N/A |
| 24 | 5/8 | 1.00 | 0.97 | 0.94 | N/A |
| | 3/4 | 1.00 | 0.98 | 0.95 | N/A |
| 30 | 5/8 | 1.00 | 0.97 | 0.94 | N/A |
| | 3/4 | 1.00 | 0.98 | 0.96 | N/A |
| 36 | 5/8 | 1.00 | 0.97 | 0.94 | N/A |
| | 3/4 | 1.00 | 0.99 | 0.97 | N/A |
| 42 | 5/8 | 1.00 | 0.98 | 0.95 | 0.91 |
| | 3/4 | 1.00 | 0.98 | 0.97 | 0.96 |
| 48 | 3/4 | 1.00 | 0.98 | 0.95 | 0.92 |
| | 7/8 | 1.00 | 0.98 | 0.97 | 0.96 |
| 60 | 7/8 | 1.00 | 0.98 | 0.94 | 0.90 |
| | 1 1/8 | 1.00 | 0.99 | 0.98 | 0.97 |

Table 5-4 Suction line length/size VS capacity multiplier

**NOTE**

Using suction line larger than shown in chart will result in poor oil return and is not recommended. For example: the system capacity published in AHRI is 17800 Btu/h. This data is based on the AHRI test condition and 25 feet line set with standard suction tube size (3/4" tube). If you need to add the line set more than 25 feet or use the optional suction tube size, you need to recalculate the capacity with the coefficient in the table. For 50 feet line and 5/8" suction tube, the capacity will be 17800*0.97=17266 Btu/h.

Determine required line length and lift. You will need this later in Section 14.

Total Line Length = _____ Feet.

Total vertical Change(Lift) = _____ Feet.

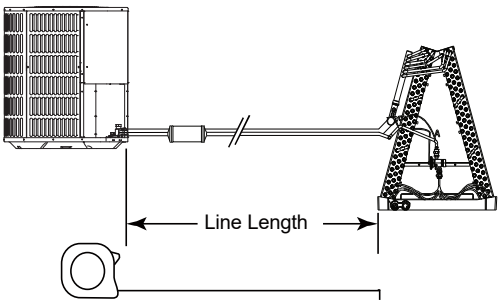


Figure 5-2

## 5.4 Refrigerant Line Insulation

**NOTE**

The suction line must always be insulated. DO NOT allow the Liquid Line and Suction Line to come in direct (metal to metal) contact.

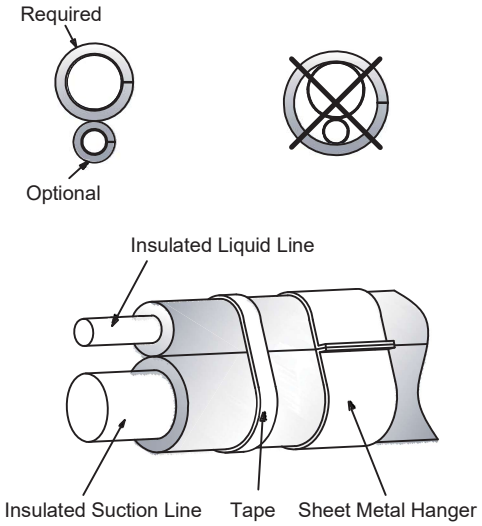


Figure 5-3

## 5.5 Reuse Existing Refrigerant Lines

**⚠ CAUTION**

If using existing refrigerant lines make certain that all joints are brazed, not soldered.

For retrofit applications, where the existing refrigerant lines will be used, the following precautions should be taken:

- Ensure that the size of the refrigerant lines is correct. Refer to Section 2.2 and Table 5-2.
- Ensure that the refrigerant lines are free of leaks, acid, and oil.

**NOTE**

The manufacturer recommends installing only approved matched indoor and outdoor systems. All of the manufacturer's split systems are AHRI certified. Some of the benefits of installing approved matched indoor and outdoor split systems are maximum efficiency, optimum performance and the best overall system reliability.

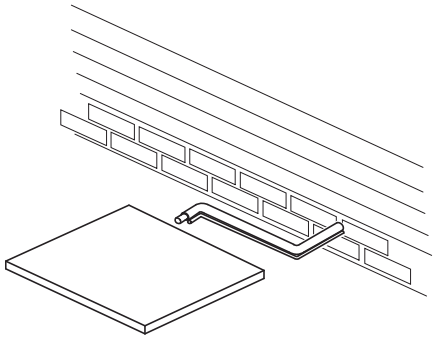

Figure 5-4

# 6 REFRIGERANT LINE ROUTING

## 6.1 Precautions

**NOTE**

Take precautions to prevent noise within the building structure due to vibration transmission from the refrigerant lines. For example:

- When the refrigerant lines have to be fastened to floor joists or other framing in a structure, use isolation type hangers.
- Isolation hangers should also be used when refrigerant lines are run in stud spaces or enclosed ceilings.
- Where the refrigerant lines run through a wall or sill, they should be insulated and isolated.
- Isolate the lines from all ductwork.
- Minimize the number of 90º turns.
- Use PVC piping as a conduit for all underground installations as shown in Figure 15. Buried lines should be keep as short as possible.
- The lines should not obstruct service access to the coil, air handling system or filter.
- Care must also be taken to isolate the refrigerant lines to minimize noise transmission from the equipment to the structure.

Comply with National, State, and Local codes when isolating linesets from joists, rafters, walls, or other structural elements.

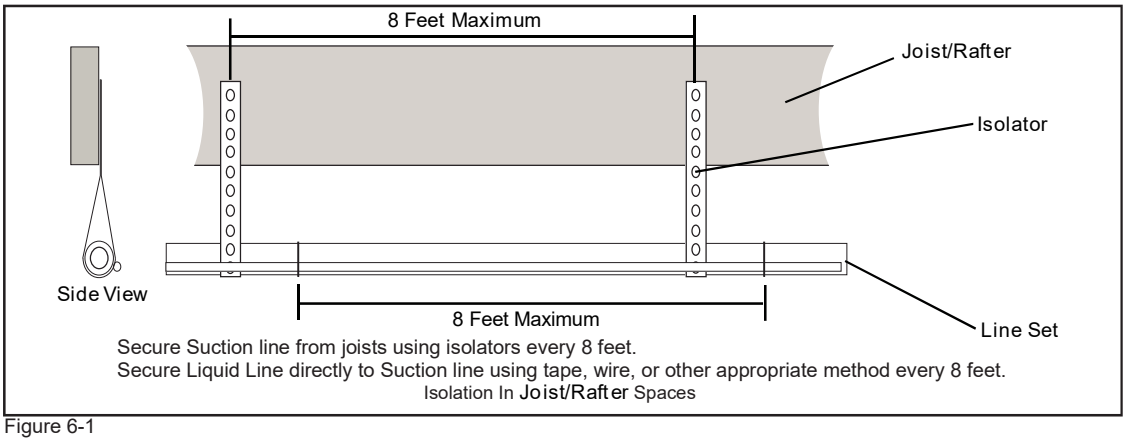


Figure 6-1

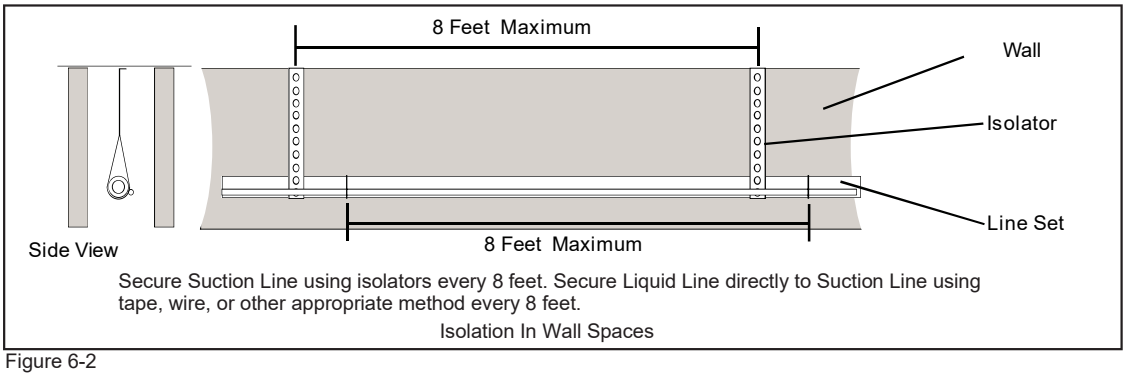


Figure 6-2

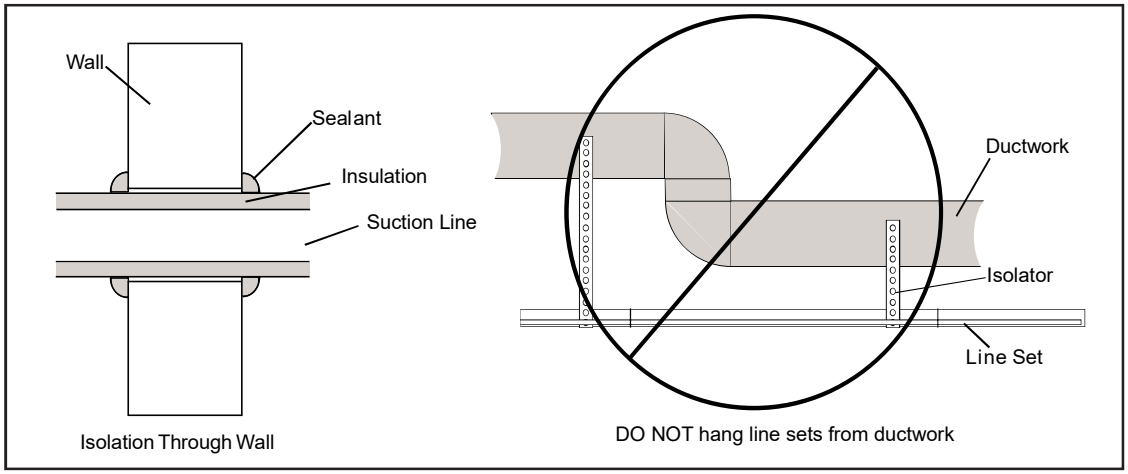


Figure 6-3

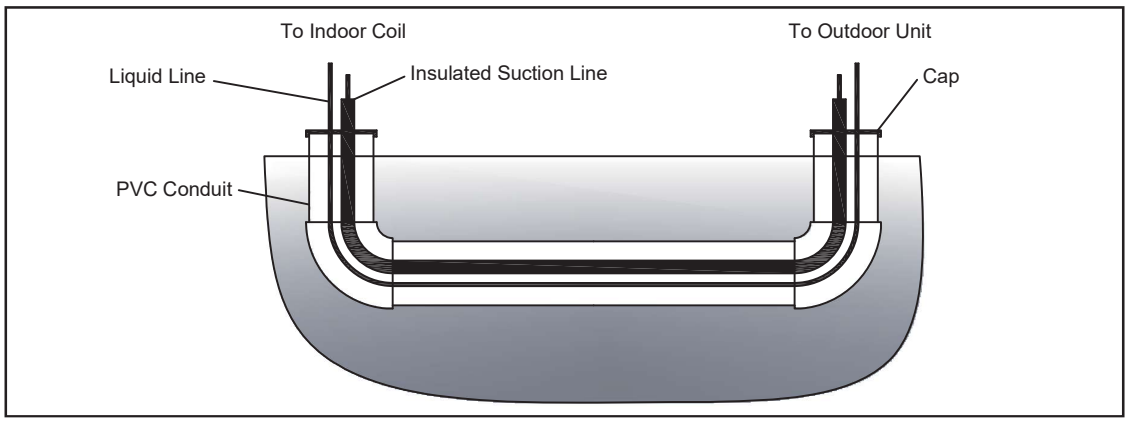


Figure 6-4

# 7 REFRIGERANT LINE BRAZING

## 7.1 Braze The Refrigerant Lines

1. Remove caps or plugs. Use a deburing tool to debur the pipe ends. Clean both internal and external surfaces of the tubing using an emery cloth.

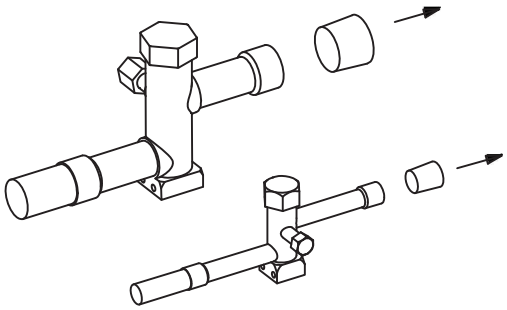

Figure 7-1

2. Remove the pressure tap cap from both service valves.

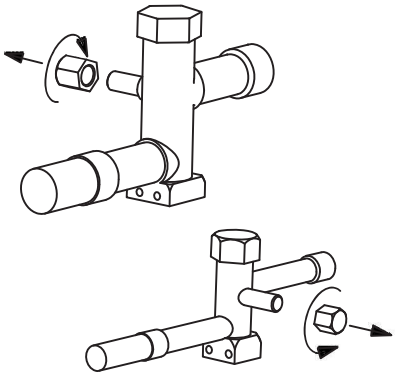

Figure 7-2

3. Purge the refrigerant lines and indoor coil with dry nitrogen.

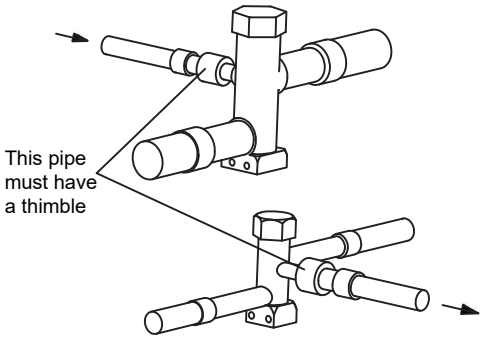


Figure 7-3

4. Wrap a wet rag around the valve body to avoid heat damage and continue the dry nitrogen purge (Fig. 7-4).

   Braze the refrigerant lines to the service valves.

   Check liquid line filter drier's directional flow arrow to confirm correct direction of refrigeration flow (away from outdoor unit and toward evaporator coil) as illustrated. Brazing the filter drier to the Liquid Line.

   Continue the dry nitrogen purge. Do not remove the wet rag until all brazing is completed.

**NOTE**

Remove the wet rag before stopping the dry nitrogen purge.

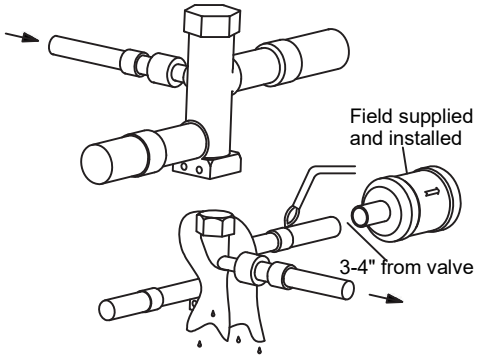


Figure 7-4

5. Replace the pressure tap caps after the service valves have cooled.

**NOTE**

Do not over tighten (between 40 and 60 inch-lbs. maximum).

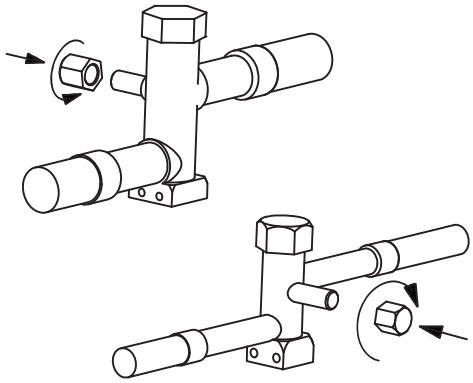

Figure 7-5

# 8 REFRIGERANT LINE LEAK CHECK

## 8.1 Check For Leaks

1. Pressurize the refrigerant lines and evaporator coil to 150 PSIG using dry nitrogen.

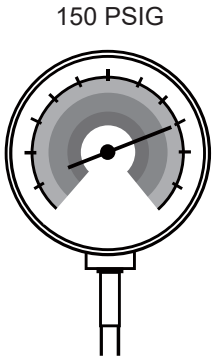


Figure 8-1

2. Check for leaks by using a soapy solution or bubbles at each brazed location.

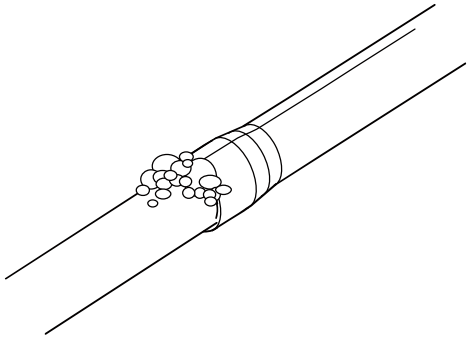

Figure 8-2

Remove nitrogren pressure and repair any leaks before continuing.

# 9 EVACUATION

## 9.1 Evacuate the Refrigerant Lines and Indoor Coil

**NOTE**

Do not open the service valves until the refrigerant lines and indoor coil leak check and evacuation are complete.

1. Evacuate until the micron gauge reads no higher than 350 microns, then close off the valve to the vacuum pump.

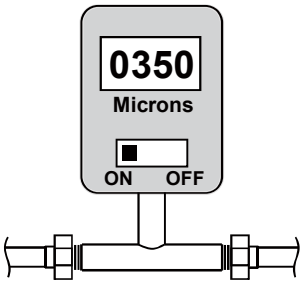


Figure 9-1

2. Observe the micron gauge. Evacuation is complete if the micron gauge does not rise above 500 microns in one (1) minute.

   Once evacuation is complete blank off the vacuum pump and micron gauge, and close the valves on the manifold gauge set.

Figure 9-2

# 10 SERVICE VALVES

## 10.1 Open the Service Valves

**⚠ WARNING**

Extreme caution should be exercised when opening the Liquid Line Service Valve. Turn counterclock wise until the valve stem just touches the rolled edge. No torque is required. Failure to follow this warning will result in abrupt release of system charge and may result in personal injury and /or property damage.

**NOTE**

Leak check and evacuation must be completed before opening the service valves.

1. Remove Service Valve Cap (Fig. 10-1).
2. Fully insert hex wrench into the stem and back out counterclockwise until valve stem just touches the rolled edge.
3. Replace the valve stem cap to prevent leaks. Tighten finger tight plus an additional 1/6 turn.

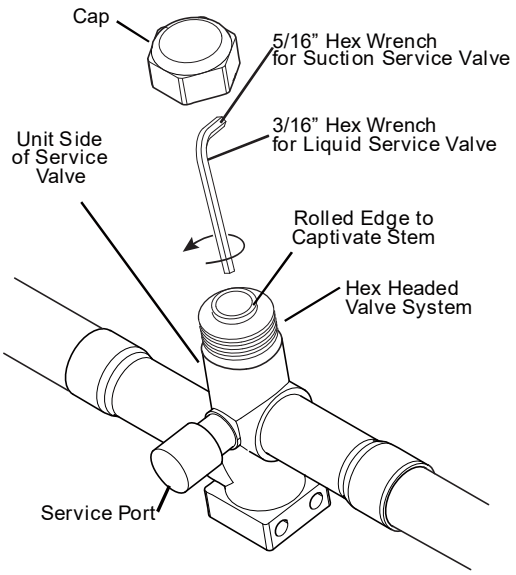


Figure 10-1

# 11 ELECTRICAL - LOW VOLTAGE

## 11.1 Low Voltage Maximum Wire Length

Table 11-1 Defines the maximum total length of low voltage wiring from the outdoor unit to the indoor unit and to the thermostat.

| 24 Volts - Wire Size | Max. Wire Length |
|---|---|
| 18 AWG | 150 Ft. |
| 16 AWG | 225 Ft. |
| 14 AWG | 300 Ft. |

Table 11-1

## 11.2 Low Voltage Hook-up Diagrams

Air Handler Hook-up Diagram

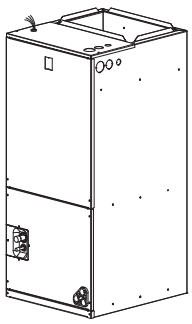

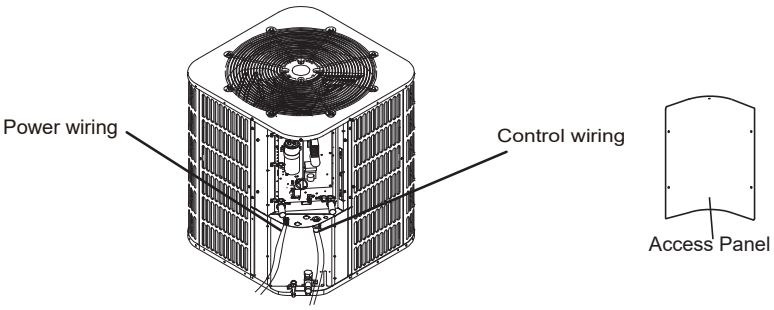


Low Voltage connection must be made inside the outdoor unit case.

Figure 11-1

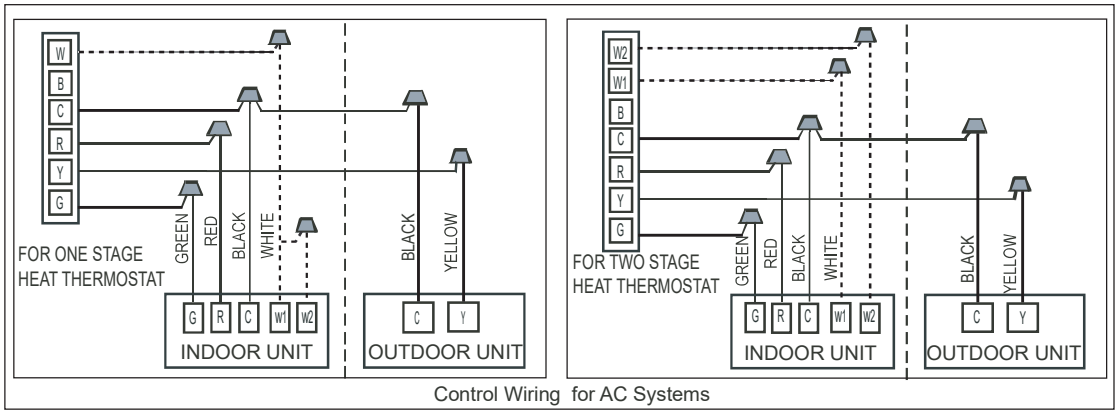


Control Wiring for AC Systems

Figure 11-2

Notes: "-----"The electric auxiliary heat connection (optional).
W :Electric auxiliary heat signal.
W1 :The first Electric auxiliary heat signal.
W2 :The second Electric auxiliary heat signal.

**⚠ WARNING**

Low Voltage line must be connected inside the outdoor unit case through control wiring channel on the right. High Voltage line must be connected through power wiring channel on the left. Mixed channel may result in personal injury.

1. During installation or maintenance, the tie of rubber ring on the electric control box shall not be cut with scissors. It can be untied by pressing the loose buckle. The tightening belt can be reused.

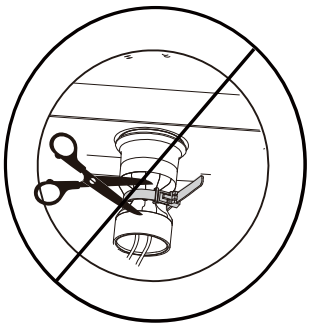

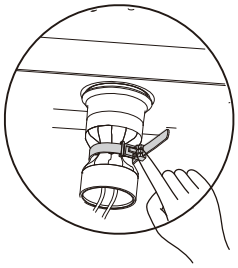

2. After installation or maintenance, the tightening belt shall be tightened, can not be loosened or discarded; the control box access panel must be installed and the screws must be tightened.

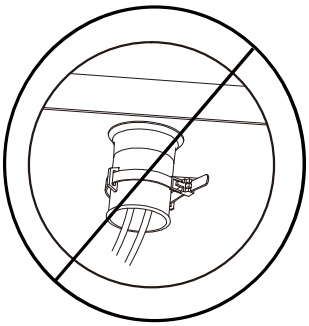

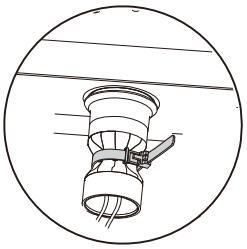

# 12 ELECTRICAL - HIGH VOLTAGE

## 12.1 High Voltage Power Supply

**⚠ WARNING**

**LIVE ELECTRICAL COMPONENTS!**

During installation, testing, servicing, and trouble shooting of this product, it may be necessary to work with live electrical components. Failure to follow all electrical safety precautions when exposed to live electrical components could result in death or serious injury.

The high voltage power supply must agree with the equipment nameplate.

Power wiring must comply with National, State and Local Codes.

Follow instructions on unit wiring diagram located on the inside of the access panel.

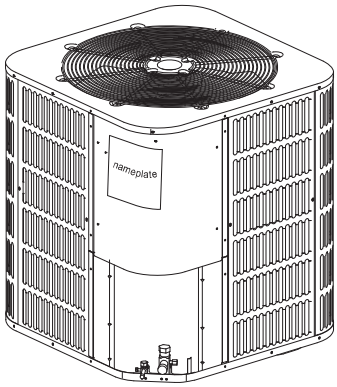


Figure 12-1

## 12.2 High Voltage Disconnect Switch

Install a separate disconnect switch at the outdoor unit.

Field provided flexible electrical conduit must be used for high voltage wiring.

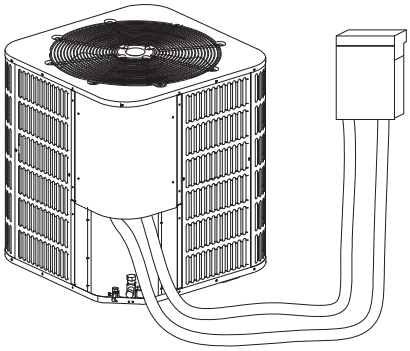

Figure 12-2

## 12.3 High Voltage Ground

Ground the outdoor unit per National, State and Local Code requirements.

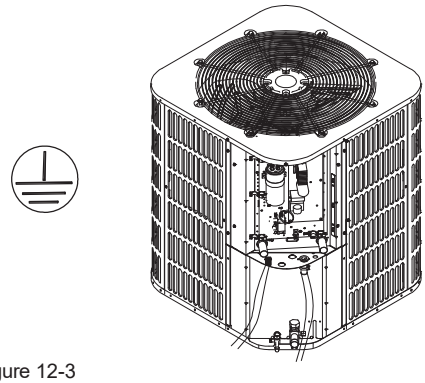

Figure 12-3

# 13 START UP

## 13.1 System Start Up

1. Ensure Sections 7, 8, 9, 10, 11, and 12 have been completed.

2. Set System Thermostat to OFF.

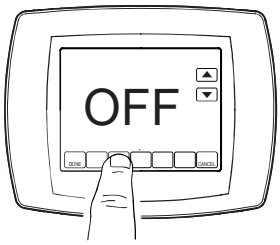


Figure 13-1

3. Turn on disconnect to apply power to the indoor and outdoor units.

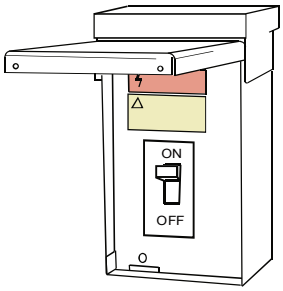


Figure 13-2

4. Wait one (1) hour before starting the unit if compressor crankcase heater is used and the outdoor ambient temperature is below 70 ºF.

Figure 13-3

5. Set system thermostat to ON.

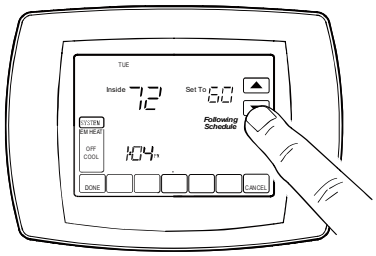


Figure 13-4

# 14 SYSTEM CHARGE ADJUSTMENT

## 14.1 Charging: Weigh-In Method

Weigh-In method can be used for the initial installation, or anytime a system charge is being replaced. Weigh-In Method can also be used when power is not available to the equipment site or operating conditions (indoor/outdoor temperatures) are not in range to verify with the suction line pressure charging method.

| Model | Factory Charge | Charge multiplier for liquid line length | | |
|---|---|---|---|---|
| All models | The data on nameplate | 5/16" | 3/8" | 1/2" |
| | | 0.4 oz/ft | 0.6 oz/ft | 1.2 oz/ft |

Table 14-1

**NOTE**

The factory charge in the outdoor unit is sufficient for 15 feet of standard size interconnecting liquid line.

New Installations — Calculating additional charge for lineset greater than 15 feet.

1. Total Line Length (ft) = _____(a)
2. Standard Lineset (ft) = ___15___(b)
3. (a) minus (b) = _____(c)
4. Refrigerant Multiplier = _____(d)
5. Refrigerant Adder (c*d) = _____(e)*

*If lineset is less than 15 feet, (e) = 0

Sealed-System Repairs — Calculating total system charge.

1. Total Line Length (ft) = _____(a)
2. Standard Lineset (ft) = ___15___(b)
3. (a) minus (b) = _____(c)
4. Refrigerant Multiplier = _____(d)
5. Refrigerant Adder (c*d) = _____(e)*
6. Factory Charge (namplate) = _____(f)
7. Total System Charge (e+f) = _____-

*If lineset is less than 15 feet, (e) = 0

**NOTE**

The only mode approved for validating system charge is while in Cooling Mode. Outdoor Temperature must be between 55°F and 115°F with Indoor Temperature kept between 70°F and 80°F.

## 14.2 Suction Line Pressure Charging And Refrigerant Adjustment In Cooling (Above 55°F Outdoor Temp.)

1. Check the outdoor ambient temperatures.

   Suction line pressure (in cooling mode) is the only recommended method of charging above 55ºF outdoor ambient temperatures.

   For outdoor ambient temperatures below 55ºF, use weigh-in charge method.

**NOTE**

It is important to return in the spring or summer to accurately charge the system in the cooling mode when outdoor ambient temperature is above 55ºF.

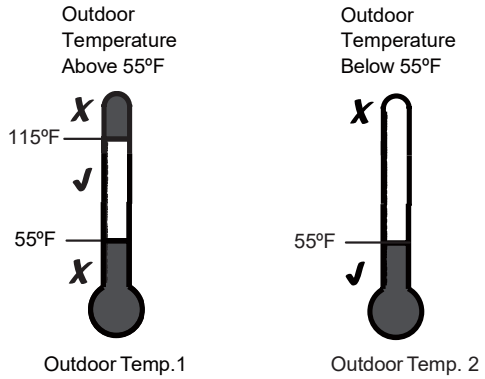


Figure 14-1

For best results the indoor temperature should be kept between 70ºF to 80ºF.

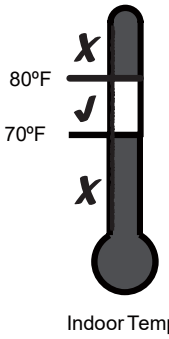


Figure 14-2

2. Ensure Sections 7, 8, 9, 10,11,12 and 13 have been completed.

3. Stabilize the system by operating for a minimum of 20 minutes.

**NOTE**

At startup, or whenever charge is removed or added, the system must be operated for a minimum of 20 minutes to stabilize before accurate measurements can be made.

Figure 14-3

- Measured Suction Line Pressure = _____PSIG
- Outdoor Ambient Temperature = _____ ºF
- Indoor Ambient Temperature = _____ ºF
- Calculate Liquid Line Pressure = _____PSIG
- Measured Suction Line Temperature = _____ ºF

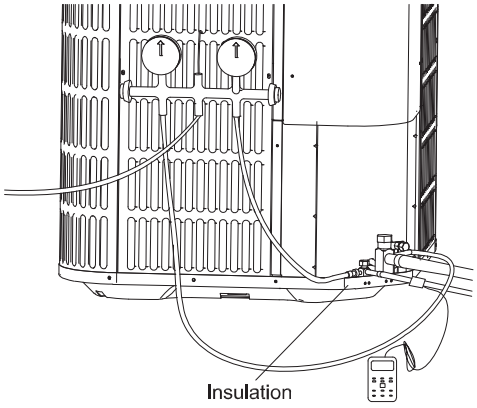


Figure 14-4

**Design superheat with TXV throttle**

| Outdoor DB (°F) | Indoor Unit Inlet DB/WB (°F) | | | | | |
|---|---|---|---|---|---|---|
| | 95/79 | 90/75 | 85/71 | 80/67 | 75/63 | 70/58 |
| 115 | 13 | 12 | 11 | 11 | 10 | 9 |
| 110 | 13 | 11 | 10 | 10 | 10 | 9 |
| 105 | 12 | 11 | 10 | 10 | 9 | 8 |
| 100 | 11 | 10 | 10 | 10 | 9 | 8 |
| 95 | 11 | 10 | 10 | 9 | 8 | 8 |
| 90 | 11 | 10 | 10 | **9** | 8 | 8 |
| 85 | 12 | 10 | 9 | 9 | 8 | 8 |
| 80 | 13 | 11 | 9 | 9 | 8 | 8 |
| 75 | 14 | 12 | 9 | 8 | 7 | 5 |
| 70 | 10 | 9 | 8 | 6 | 5 | 5 |
| 65 | 7 | 6 | 6 | 6 | 5 | 5 |
| 60 | 6 | 5 | 5 | 5 | 5 | 5 |
| 55 | 6 | 5 | 5 | 5 | 5 | 5 |

**Design superheat with piston throttle**

| Outdoor DB (°F) | Indoor Unit Inlet DB/WB (°F) | | | | | |
|---|---|---|---|---|---|---|
| | 95/79 | 90/75 | 85/71 | 80/67 | 75/63 | 70/58 |
| 115 | 16 | 11 | 6 | 5 | 5 | 5 |
| 110 | 18 | 13 | 8 | 5 | 5 | 5 |
| 105 | 20 | 15 | 10 | 5 | 5 | 5 |
| 100 | 23 | 17 | 13 | 7 | 5 | 5 |
| 95 | 25 | 20 | 15 | **9** | 5 | 5 |
| 90 | 27 | 22 | 17 | 12 | 5 | 5 |
| 85 | 29 | 24 | 19 | 14 | 8 | 5 |
| 80 | 25 | 20 | 16 | 11 | 7 | 5 |
| 75 | 22 | 18 | 14 | 9 | 5 | 5 |
| 70 | 22 | 18 | 13 | 8 | 5 | 5 |
| 65 | 21 | 17 | 13 | 8 | 5 | 5 |
| 60 | 20 | 16 | 12 | 7 | 5 | 5 |
| 55 | 19 | 15 | 11 | 5 | 5 | 5 |

**Determine the final superheat value using total Line Length and Lift measured in 5.3 and the charts below**

18K AC with TXV

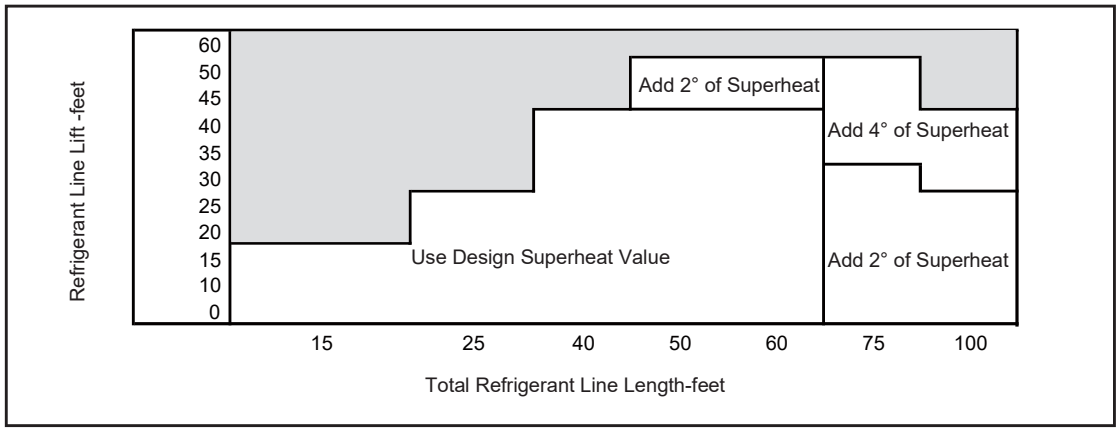

24K AC with Orifice

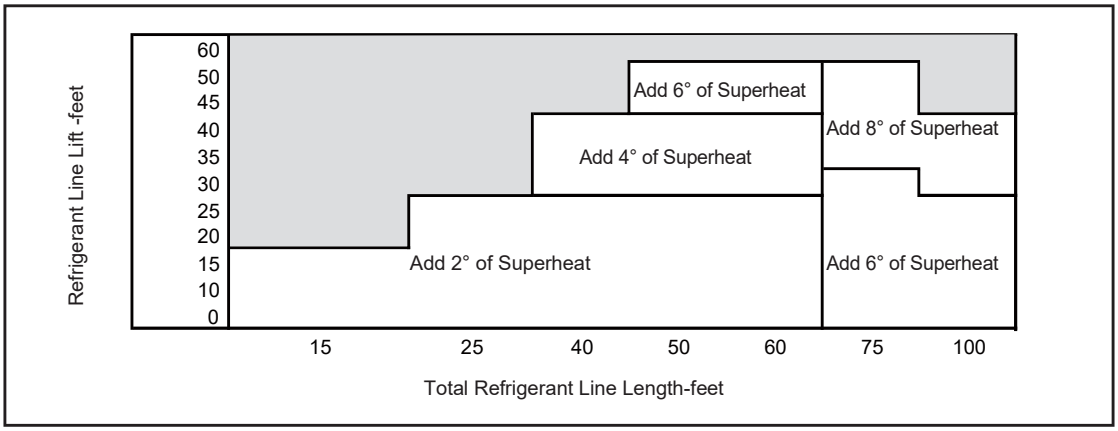


30K AC with Orifice

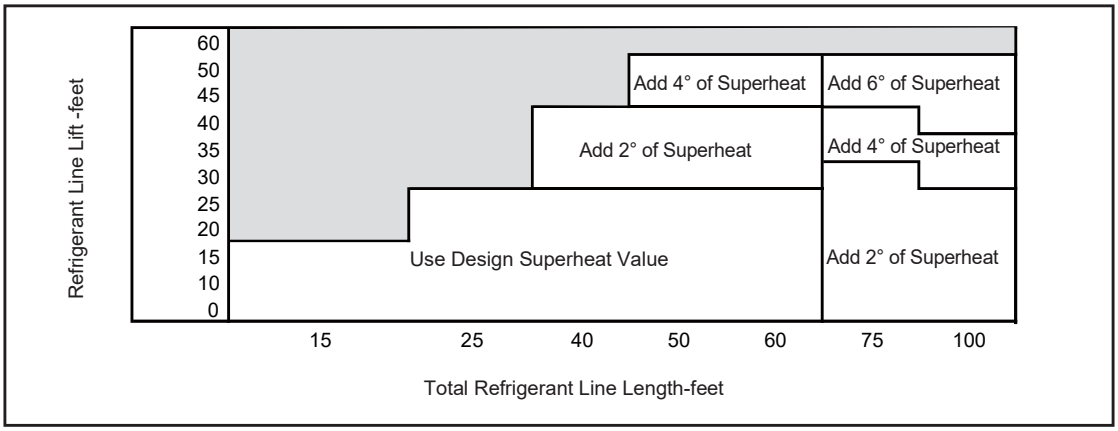


36K AC with TXV

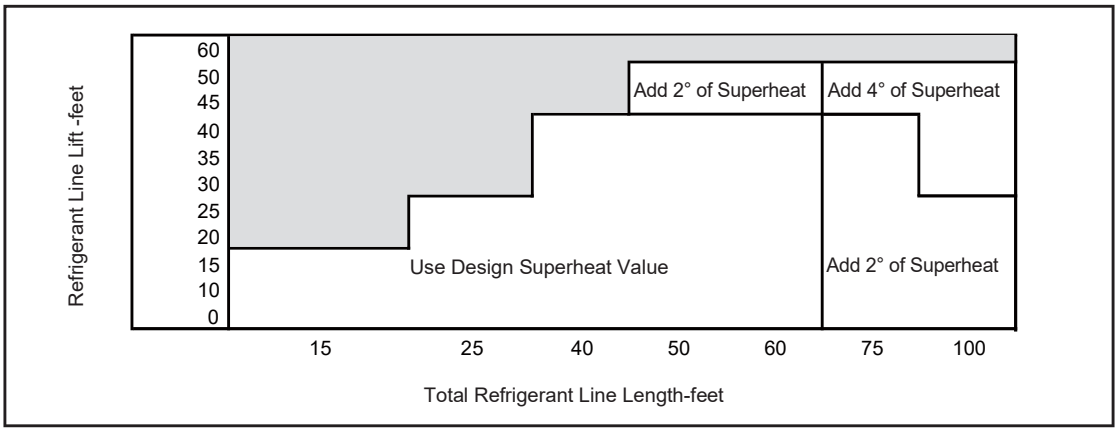

42K AC with TXV

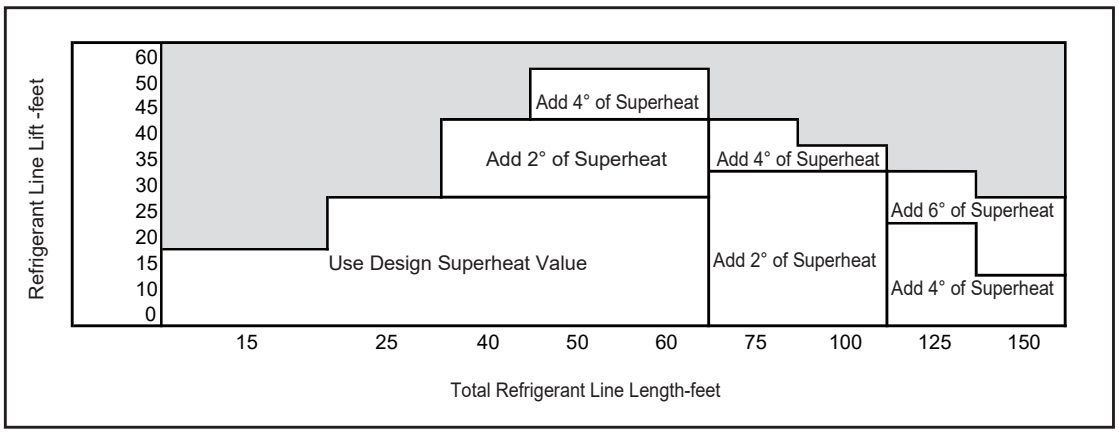


48K AC with Orifice

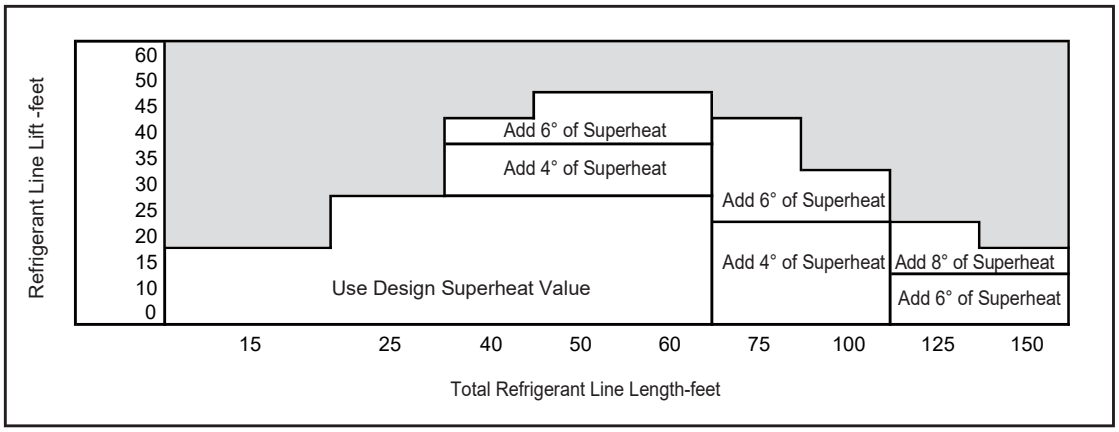


60K AC with TXV

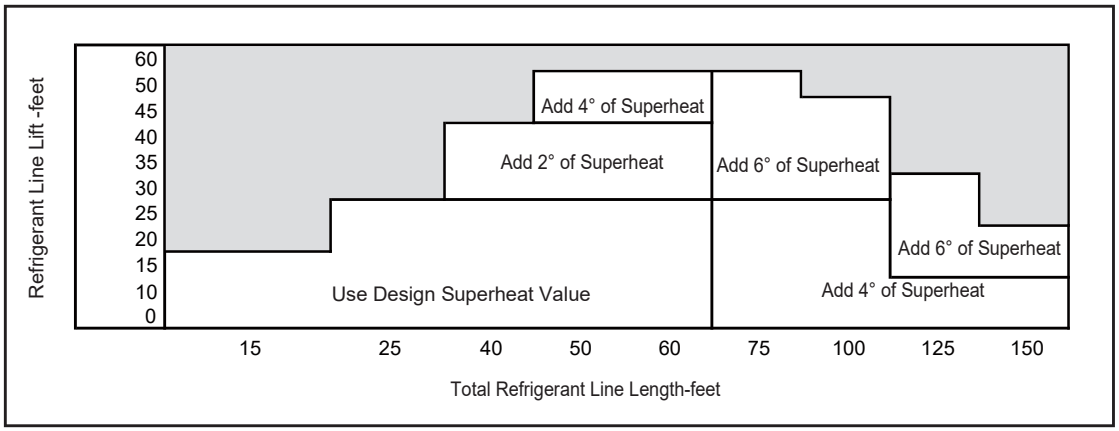

5. Use the final superheat value, refrigerant temperature and pressure from STEP 4, to determine the proper suction gauge pressure using Table 14-1.

Example: Assume a 12º F final superheat value and suction temp of 58º F.

1. Locate 12º F final Superheat in Table 14-1.
2. Locate the Suction Temperarature (58º F) in the left column.
3. The Suction Gage Pressure should be approximately 133 PSIG. (This is the shown as the intersection of the Final Superheat column and the Suction Temperature row.

Design Superheat Value = _____ºF

Superheat Correction = _____ ºF

Final Superheat Value = _____ ºF

| R410A Refrigerant Superheat Chart | | | | | | | |
|---|---|---|---|---|---|---|---|
| Suction Temp (°F) | Final Superheat (°F) | | | | | | |
| | 6 | 8 | 10 | 12 | 14 | 16 | 18 |
| | Suction Gauge Pressure (PSI) | | | | | | |
| 40 | 105 | 101 | 97 | 93 | 89 | 86 | 82 |
| 42 | 109 | 105 | 101 | 97 | 93 | 89 | 86 |
| 44 | 114 | 109 | 105 | 101 | 97 | 93 | 89 |
| 46 | 118 | 114 | 109 | 105 | 101 | 97 | 93 |
| 48 | 123 | 118 | 114 | 109 | 105 | 101 | 97 |
| 50 | 128 | 123 | 118 | 114 | 109 | 105 | 101 |
| 52 | 133 | 128 | 123 | 118 | 114 | 109 | 105 |
| 54 | 138 | 133 | 128 | 123 | 118 | 114 | 109 |
| 56 | 143 | 138 | 133 | 128 | 123 | 118 | 114 |
| 58 | 148 | 143 | 138 | 133 | 128 | 123 | 118 |
| 60 | 153 | 148 | 143 | 138 | 133 | 128 | 123 |
| 62 | 159 | 153 | 148 | 143 | 138 | 133 | 128 |
| 64 | 164 | 159 | 153 | 148 | 143 | 138 | 133 |
| 66 | 170 | 164 | 159 | 153 | 148 | 143 | 138 |
| 68 | 176 | 170 | 164 | 159 | 153 | 148 | 143 |
| 70 | 182 | 176 | 170 | 164 | 159 | 153 | 148 |
| 72 | 188 | 182 | 176 | 170 | 164 | 159 | 153 |

Table 14-1

6. Adjust refrigerant level to attain proper final superheat.

**NOTE**

**Add refrigerant** if the measured superheat is higher than the final superheat value.

- Connect gages to refrigerant bottle and unit as illustrated (Fig. 14-5).
- Purge all hoses.
- Open bottle.
- Stop adding refrigerant when gas line pressure matches the Refrigerant Charging Chart.

**NOTE**

**Recover refrigerant** if the measured superheat is lower than the final superheat value.

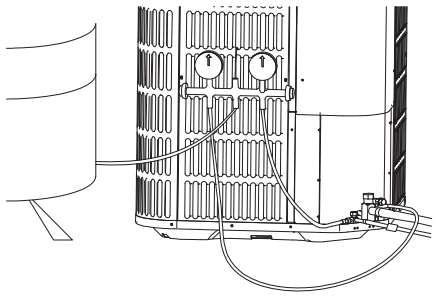

Figure 14-5

7. Stabilize the system.

- Wait 20 minutes for the system condition to stabilize between adjustments.

**NOTE**

When the gas line pressure match the chart, the system is properly charged.

- Remove gages.
- Replace service port caps to prevent leaks. Tighten finger tight plus an additional 1/6 turn.

Figure 14-6

8. Record system Information for reference Table 14-2.

Record system pressures and temperatures after charging is complete.

| Description | Value |
|---|---|
| Outdoor model number | |
| Measured Outdoor Ambient | °F |
| Measured Indoor Ambient | °F |
| Liquid Gage Pressure | PSIG |
| Suction Gage Pressure | PSIG |
| Suction Line Temperature | °F |

Table 14-2

# 15 SYSTEM OPERATION AND TROUBLESHOOTING

## 15.1 Protection Function

Discharge temperature protection
Discharge temperature > 239°F, compressor stops working.
Discharge temperature < 167°F, compressor restarts working.

For 18K-36K
High pressure protection
High pressure > 609 PSIG, compressor and outdoor fan motor stop working.
High pressure < 464 PSIG, compressor and outdoor fan motor restart working (3 minutes delay necessary).

T4 = Ambient Temperature
T4 < 32°F, compressor can't start
T4 ≥ 41°F, compressor restarts working

For 42K-60K
High pressure protection
High pressure > 638 PSIG, compressor and outdoor fan motor stop working.
High pressure < 464 PSIG, compressor and outdoor fan motor restart working (3 minutes delay necessary).

## 15.2 Temperature Sensor Resistance Table

| Temperature °F | Resistance kΩ | Temperature °F | Resistance kΩ | Temperature °F | Resistance kΩ | Temperature °F | Resistance kΩ |
|---|---|---|---|---|---|---|---|
| -4 | 106.73 | 37 | 29.87 | 78 | 10 | 119 | 3.69 |
| -3 | 103.25 | 38 | 29.22 | 79 | 9.5 | 120 | 3.61 |
| -2 | 99.89 | 39 | 28.19 | 80 | 9.26 | 121 | 3.53 |
| -1 | 96.65 | 40 | 27.39 | 81 | 9.03 | 122 | 3.45 |
| 0 | 93.53 | 41 | 26.61 | 82 | 8.81 | 123 | 3.38 |
| 1 | 90.53 | 42 | 25.85 | 83 | 8.59 | 124 | 3.3 |
| 2 | 87.62 | 43 | 25.12 | 84 | 8.38 | 125 | 3.23 |
| 3 | 84.83 | 44 | 24.42 | 85 | 8.17 | 126 | 3.16 |
| 4 | 82.13 | 45 | 23.73 | 86 | 7.97 | 127 | 3.1 |
| 5 | 79.52 | 46 | 23.07 | 87 | 7.78 | 128 | 3.03 |
| 6 | 77.01 | 47 | 22.42 | 88 | 7.59 | 129 | 2.96 |
| 7 | 74.58 | 48 | 21.8 | 89 | 7.4 | 130 | 2.9 |
| 8 | 72.24 | 49 | 21.2 | 90 | 7.22 | 131 | 2.84 |
| 9 | 69.98 | 50 | 20.61 | 91 | 7.05 | 132 | 2.78 |
| 10 | 67.8 | 51 | 20.04 | 92 | 6.88 | 133 | 2.72 |
| 11 | 65.69 | 52 | 19.49 | 93 | 6.72 | 134 | 2.67 |
| 12 | 63.65 | 53 | 18.96 | 94 | 6.56 | 135 | 2.61 |
| 13 | 61.68 | 54 | 18.44 | 95 | 6.4 | 136 | 2.56 |
| 14 | 59.78 | 55 | 17.94 | 96 | 6.25 | 137 | 2.5 |
| 15 | 57.95 | 56 | 17.45 | 97 | 6.1 | 138 | 2.45 |
| 16 | 56.17 | 57 | 16.98 | 98 | 5.96 | 139 | 2.4 |
| 17 | 54.46 | 58 | 16.52 | 99 | 5.82 | 140 | 2.35 |
| 18 | 52.8 | 59 | 16.08 | 100 | 5.68 | 141 | 2.3 |
| 19 | 51.2 | 60 | 15.65 | 101 | 5.55 | 142 | 2.25 |
| 20 | 49.65 | 61 | 15.23 | 102 | 5.42 | 143 | 2.21 |
| 21 | 48.16 | 62 | 14.83 | 103 | 5.3 | 144 | 2.16 |
| 22 | 46.71 | 63 | 14.43 | 104 | 5.18 | 145 | 2.12 |
| 23 | 45.31 | 64 | 14.05 | 105 | 5.06 | 146 | 2.08 |
| 24 | 43.95 | 65 | 13.68 | 106 | 4.94 | 147 | 2.03 |
| 25 | 42.64 | 66 | 13.32 | 107 | 4.83 | 148 | 1.99 |
| 26 | 41.38 | 67 | 12.97 | 108 | 4.72 | 149 | 1.95 |
| 27 | 40.15 | 68 | 12.64 | 109 | 4.61 | 150 | 1.91 |
| 28 | 38.97 | 69 | 12.31 | 110 | 4.51 | 151 | 1.88 |
| 29 | 37.82 | 70 | 11.99 | 111 | 4.41 | 152 | 1.84 |
| 30 | 36.71 | 71 | 11.68 | 112 | 4.31 | 153 | 1.8 |
| 31 | 35.64 | 72 | 11.38 | 113 | 4.21 | 154 | 1.77 |
| 32 | 34.6 | 73 | 11.09 | 114 | 4.12 | 155 | 1.73 |
| 33 | 33.59 | 74 | 10.8 | 115 | 4.03 | 156 | 1.7 |
| 34 | 32.61 | 75 | 10.53 | 116 | 3.94 | 157 | 1.66 |
| 35 | 31.67 | 76 | 10 | 117 | 3.85 | 158 | 1.63 |
| 36 | 30.76 | 77 | 10 | 118 | 3.77 | 159 | 1.6 |

Table 15-1

## 15.3 Electrical Data Table

| Model | 18 | 24 | 30 | 36 | 42 | 48 | 60 |
|---|---|---|---|---|---|---|---|
| Minimum circuit ampacity (A) | 11.9 | 16.3 | 16.3 | 21.1 | 24.8 | 29.7 | 38.5 |
| Maximum circuit protector (A) | 20 | 25 | 30 | 35 | 40 | 50 | 60 |

## 15.4 Troubleshooting Table

| SYSTEM FAULTS | | WHAT TO CHECK MODE | POWER SUPPLY | HIGH VOLTAGE WIRING | I.D. CONTROL DEF. | COMPRESSR CAPACITOR | O.D. FAN CAPACITOR | I.D. BLOWER CAPACITOR | CONTACTOR CONTACTS | LOW VOLTAGE WIRING | CONTROL TRANSFORMER | THERMOSTAT | CONTACTOR COIL | LOW VOLTAGE FUSE | STUCK COMPRESSOR | INEFFICIENT COMP. | REF. UNDERCHARGE | REF. OVERCHARGE | EXCESSIVE EVAP. LOAD | NONCONDENSABLES | RES. O.D. AIRFLOW | O.D. AIR RECIRCULATION | TXV STUCK OPEN | SUPERHEAT | RES. I.D. AIRFLOW | REF. CIR. RESTRICTIONG | SOV LEAKING | SOV COIL DEFECTIVE | CHECK VALVE LEAKING | LPC SENSOR DEF. | DEFROST CONTROL DEF. | T4 TEMP. SENSOR DEF. | T3 TEMP. SENSOR DEF. | HPC/HGS SENSOR DEF. |
|---|---|---|---|---|---|---|---|---|---|---|---|---|---|---|---|---|---|---|---|---|---|---|---|---|---|---|---|---|---|---|---|---|---|---|
| REFRIGERANT CIRCUIT | | | | | | | | | | | | | | | | | | | | | | | | | | | | | | | | | | |
| Head Pressure Too High | C | | | | | | | | | | | | | | | | | P | P | S | P | S | | | | S | | | | | | | | |
| | H | | | | | | | | | | | | | | | | | P | P | S | | | | | P | S | | | | | | | | |
| Head Pressure Too Low | C | | | | | | | | | | | | | | | S | P | | | | | | S | S | | S | S | | P | | | | | |
| | H | | | | | | | | | | | | | | | S | P | | | | | | S | S | | S | S | S | P | | | | | |
| Suction Pressure Too High | C | | | | | | | | | | | | | | | S | | P | P | | | | | S | | | P | | P | | | | | |
| | H | | | | | | | | | | | | | | | S | | | | | | | | S | | | P | | | | | | | |
| Suction Pressure Too Low | C | | | | | | | | | | | | | | | | P | | | | | | | S | P | S | | | | | | | | |
| | H | | | | | | | | | | | | | | | | P | | | | S | S | | S | | S | | S | | | | | | |
| Liquid Refrig. Floodback (TXV) | C | | | | | | | | | | | | | | | | | | | | | | P | | | | | | P | | | | | |
| | H | | | | | | | | | | | | | | | | | | | | | | P | | | | | | P | | | | | |
| I.D. Coil Frosting | C | | | | | | | | | | | | | | | | P | | | | S | S | | | | | | | | | | | | |
| | H | | | | | | | | | | | | | | | | | | | | | | | | | | | | | | | | | |
| Compressor Runs Inadequate or No Cooling/Heating | C | | | | | | | | | | | | | | | S | P | | S | S | | | | S | P | S | S | | S | | | | | |
| | H | | | | | | | | | | | | | | | S | P | | | S | | | | S | P | S | S | S | S | | | | | |
| ELECTRICAL | | | | | | | | | | | | | | | | | | | | | | | | | | | | | | | | | | |
| Compressor & O.D. Fan Won't Start | C | P | P | | | | | S | S | P | S | P | P | | | | | | | | | | | | | | | | | | | | | |
| | H | P | P | | | | | | S | P | S | | P | | | | | | | | | | | | | | | | | S | S | S | S | S |
| Compressor Will Not Start But O.D. Fan Runs | C | | P | | P | | | | | | | | | P | | | | | | | | | | | | | | | | | | | | |
| | H | | P | | P | | | S | | | | P | | P | | | | | | | | | | | | | | | | | S | | S | |
| O.D. Fan Won't Start | C | | P | | | P | | | | | | | | | | | | | | | | | | | | | | | | | | | | |
| | H | | P | | | P | | | | | | | | | | | | | | | | | | | | | | | | | S | | | |
| Compressor Hums But Won't Start | C | | | | P | | | S | | | | | | P | | | | | | | | | | | | | | | | | | | | |
| | H | | | | P | | | S | | | | | | P | | | | | | | | | | | | | | | | | | | | |
| I.D. Blower Won't Start | C | P | P | S | | | P | | S | P | S | | S | | | | | | | | | | | | | | | | | | | | | |
| | H | P | P | S | | | P | | S | P | S | | S | | | | | | | | | | | | | | | | | | | | | |
| DEFROST | | | | | | | | | | | | | | | | | | | | | | | | | | | | | | | | | | |
| Unit Won't Initiate Defrost | C | | | | | | | | | | | | | | | | | | | | | | | | | | | | | | | | | |
| | H | | | | | | | | | | | | | | | | | | | | | | | | | | | P | | | P | | S | |
| Defrost Terminates on Time | C | | | | | | | | | | | | | | | | | | | | | | | | | | | | | | | | | |
| | H | | | | | | | | | | | | | | | | P | | | | | | | | | | | | | | P | | S | |
| Unit Icing Up | C | | | | | | | | | | | | | | | | | | | | | | | | | | | | | | | | | |
| | H | | | | | | | | | | | | | | | | P | | | | S | S | | | S | | | P | | | P | | | |

C- Cooling H - Heating P - Primary Causes S - Secondary Causes

## 15.5 Fault Code Table

Fault code of motor driver module

| LED1 ERROR CODE | | | CONTENT |
|---|---|---|---|
| 0 | STEADY ON | | NORMAL OPERATION |
| | OFF | | POWER SUPPLY FAILURE |
| | KEEP FLASHING | 2s ON 2s OFF | STANDBY |
| | | 0.2s ON 0.2s OFF | INTER INTEGRATED CIRCUIT COMMUNICATION ERROR |
| 1 | 1FLASH/CYCLE | | MOTOR CURRENT ERROR |
| 2 | 2FLASH/CYCLE | | INVERTER MODULE TEMPERATURE ERROR |
| 3 | 3FLASH/CYCLE | | DC BUS VOLTAGE ERROR |
| 4 | 4FLASH/CYCLE | | MOTOR PARAMETER ERROR |
| 5 | 5FLASH/CYCLE | | MOTOR STARTUP FAILURE |
| 6 | 6FLASH/CYCLE | | PHASE SEQUENCE ERROR |

Fault code of main control module

| LED2 ERROR CODE | | CONTENT |
|---|---|---|
| 0 | STEADY ON | NORMAL OPERATION |
| | OFF | POWER SUPPLY FAILURE |
| 1 | 1FLASH/CYCLE | T3 SENSOR FAILURE |
| 2 | 2FLASH/CYCLE | T4 SENSOR FAILURE |
| 3 | 3FLASH/CYCLE | LPC OPEN |
| 5 | 5FLASH/CYCLE | OFM FAILURE |
| 6 | 6FLASH/CYCLE | NO MACHINE TYPE |

# 16 WARRANTY

Assist owner with processing Warranty cards and/or online registration.

## 16.1 Maintenance

Dirt should not be allowed to accumulate on the indoor or outdoor coils or other parts in the air circuit. Clean as often as necessary to keep the unit clean. Use a brush, vacuum cleaner attachment or other suitable means.

The outdoor fan motor is permanently lubricated and does not require periodic oiling.

Refer to the furnace or air handler instructions for filter and blower motor maintenance.

The indoor coil and drain pan should be inspected and cleaned regularly to assure proper drainage.

**NOTE**

It is unlawful to knowingly vent, release or discharge refrigerant into the open air during repair, service, maintenance or the final disposal of this unit. When the system is functioning properly and the owner has been fully instructed, secure the owner's approval.

## 16.2 Removing and Installing The Cover Plate

1. Before removing the cover plate of the electronic control box, plese be noted the screws 1 - 7 must be removed first.

2. When install back the cover plate of the electric control box, plese be noted the screws 1 and 3 must be installed at the last step to facilitate assembly and avoid damage the waterproof sponge .

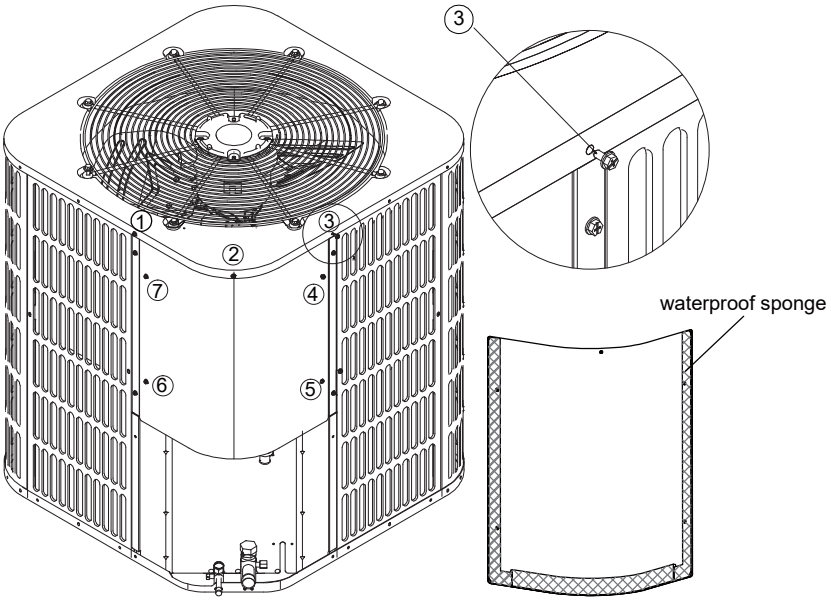


Figure 16-1

## 16.3 Changing Motor

When motor requires changing, follow the steps below:

STEP 1 - Go into electrical panel, disconnect motor power lines.

**Note**: Disconnect main power to unit. Severe burns and electrical shock will occur if you do not disconnect main power.

STEP 2 - Remove cover (be careful of motor wires).

STEP 3 - Be sure to place fan cover unit on the ground (Fig.16-2).

**Note**: Do not place or lean fan blades on ground or against surface.

STEP 4 - Remove fan motor by removing 5/16" nuts from cover.

STEP 5 - Remove fan blade from motor by removing 1/2" nut and place fan on the ground.

STEP 6 - Reverse removal process to reinstall the fan and motor.

**Note**: When connecting motor wires be sure to check motor direction.

**NOTE**

Damage will occur to condenser unit if you remove 5/16" nuts prior to cover removal.

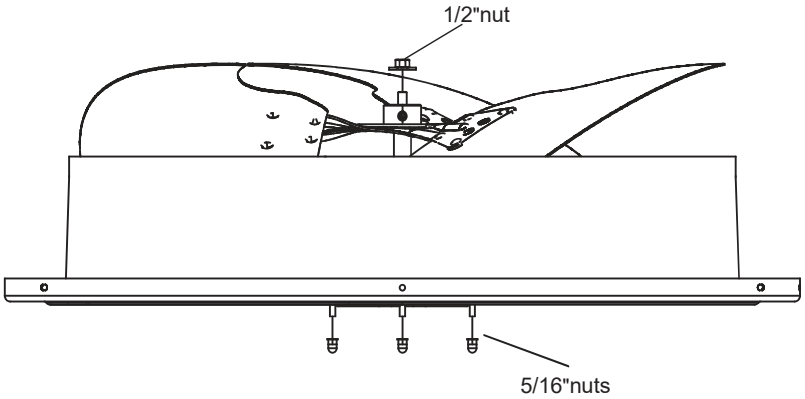


Figure 16-2

# 17 MATCHING TABLE AND CHECKOUT PROCEDURES

## 17.1 Operational and Checkout Procedures

Final phases of this installation are the unit Operational and Checkout Procedures. To obtain proper performance, all units must be operated and charge adjustments made in accordance with procedures found in the Service Facts of the Outdoor Unit.

After installation has been completed, it is recommended that the entire system be checked against the following list:

1. Be sure unit suspension (if used) is secure and that there are no tools or loose debris in or around or on top of the unit [ ]
2. Properly insulate suction lines and fittings [ ]
3. Properly secure and isolate all refrigerant lines [ ]
4. Verify that all electrical connections are tight [ ]
5. Check all duct outlets; they must be open and unrestricted [ ]
6. Check drain lines and be sure all joints are tight [ ]
7. Be sure that a return air filter is installed [ ]
8. Operate complete system in each mode to verify proper performance. Verify operation of supplementary electric heater [ ]