Midea®

Air conditioning & Heating

Installer's Guide

Condensing Units

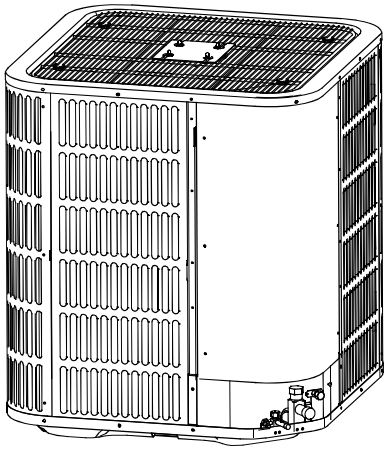

NOTE: Appearance of unit may vary.

X DRIVE SERIES

Split System Heat Pump & Air Conditioner
Up to 18 SEER
2-5 Tons
R410A

ALL phases of this installation must comply with NATIONAL, STATE AND LOCAL CODES

IMPORTANT — This Document is customer property and is to remain with this unit. Please return to service information pack upon completion of work.

These instructions do not cover all variations in systems or provide for every possible contingency to be met in connection with the installation. Should further information be desired or should particular problems arise which are not covered sufficiently for the purchaser's purposes, the matter should be referred to your installing dealer or local distributor.

Note : *The manufacturer recommends installing only approved matched indoor and outdoor systems. All of the manufacturer's split systems are A.H.R.I. rated only with TXV indoor systems. Some of the benefits of installing approved matched indoor and outdoor split systems are maximum efficiency, optimum performance and the best overall system reliability.*

Table of Contents

Section 1. Safety.....2
Section 2. Unit Location Considerations.....3
Section 3. Unit Preparation.....5
Section 4. Setting the Unit.....5
Section 5. Refrigerant Line Considerations.....6
Section 6. Refrigerant Line Routing.....7
Section 7. Refrigerant Line Brazing.....8
Section 8. Refrigerant Line Leak Check.....10
Section 9. Evacuation.....11
Section 10. Service Valves.....11
Section 11. Electrical - Low Voltage.....12
Section 12. Electrical - High Voltage.....14
Section 13. Start Up.....15
Section 14. System Charge Adjustment.....16
Section 15. System operation and Troubleshooting.....20

Section 1. Safety

Important - This document contains a wiring diagram and service information. This is customer property and is to remain with this unit. Please return to service information pack upon completion of work.

CAUTION

This information is intended for use by individuals possessing adequate backgrounds of electrical and mechanical experience. Any attempt to repair a central air conditioning product may result in personal injury and/or property damage. The manufacturer or seller cannot be responsible for the interpretation of this information, nor can it assume any liability in connection with its use.

WARNING

HAZARDOUS VOLTAGE!

Failure to follow this warning could result in property damage, severe personal injury, or death.
Disconnect all electric power, Including remote disconnects before servicing. Follow proper lockout/tagout procedures to ensure the power cannot be inadvertently energized.

WARNING

REFRIGERANT OIL!

Any attempt to repair a central air conditioning product may result in property damage, severe personal injury, or death.
These units use R-410A refrigerant which operates at 50 to 7o% higher pressures than R-22. Use only R-410A approved service equipment. Refrigerant cylinders are painted a “Rose” color to indicate the type of refrigerant and may contain a “dip” tube to allow for charging of liquid refrigerant into the system. All R-410A systems with variable speed compressors use a PVE oil that readily absorbs moisture from the atmosphere To limit this ‘hygroscopic“ action. the system should remain sealed whenever possible. If a srstem has been open to the atmosphere for more than 4 hours, the compressor oil must be replaced. Never break a vacuum with air and always change the driers when opening the system for component replacement.

CAUTION

HOT SURFACE!

May cause minor to severe burning. Failure to follow this Caution could result in property damage or personal injury.
Do not touch top of compressor.

CAUTION

CONTAINS REFRIGERANT!

Failure to follow proper procedures can result in personal illness or injury or severe equipment damage.
System contains oil and refrigerant under high pressure. Recover refrigerant to relieve pressure before opening system.

CAUTION

GROUNDING REQUIRED!

Failure to inspect or use proper service tools may result in equipment damage or personal injury.
Reconnect all grounding devices. All parts of this product that are capable of conducting electrical current are grounded. if grounding wires, screws, straps, clips, nuts, or washers used to complete a path to ground are removed for service, they must be returned to their original position and properly fastened.

WARNING

SERVICE VALVES!

Failure to follow this warning will result in abrupt release of system charge and may result in personal injury and/or property damage. Extreme caution should be exercised when opening the Liquid Line Service valve. Turn valve stem counterclockwise only until the stem contacts the rolled edge. No torque is required.

WARNING

BRAZING REQUIRED!

Failure to inspect lines or use proper service tools may result in equipment damage or personal injury.
if using existing refrigerant lines make certain that all joints are brazed, not soldered.

WARNING

HIGH LEAKAGE CURRENT!

Failure to follow this warning could result in property damage, severe personal injury, or death.
Earth connection essential before connecting electrical supply.

Section 2. Unit Location Considerations

2.1 Unit Dimensions

Unit Dimensions	
Models	H x W x L(Inches)
24	24-15/16 x 29-1/8 x 29-1/8
36	24-15/16 x 29-1/8 x 29-1/8
48	33-3/16 x 29-1/8 x 29-1/8
60	33-3/16 x 29-1/8 x 29-1/8

The unit's weight values is on the carton box.

When mounting the outdoor unit on a roof, be sure the roof will support the unit's weight. Properly selected isolation is recommended to prevent sound or vibration transmission to the building structure.

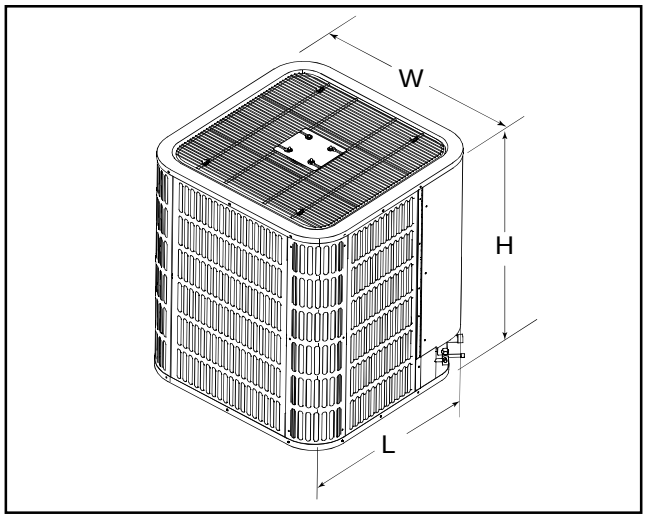

2.2 Refrigerant Piping Limits

- Maximum line length = 100 feet.
- Maximum vertical length = 50 feet.
- Compressor crankcase heat is required for line lengths over 50 feet.
- Use only the line diameters indicated in Table 5.1.
- Such as the connecting tube is more than 60 feet, does not use large Suction line than recommend.

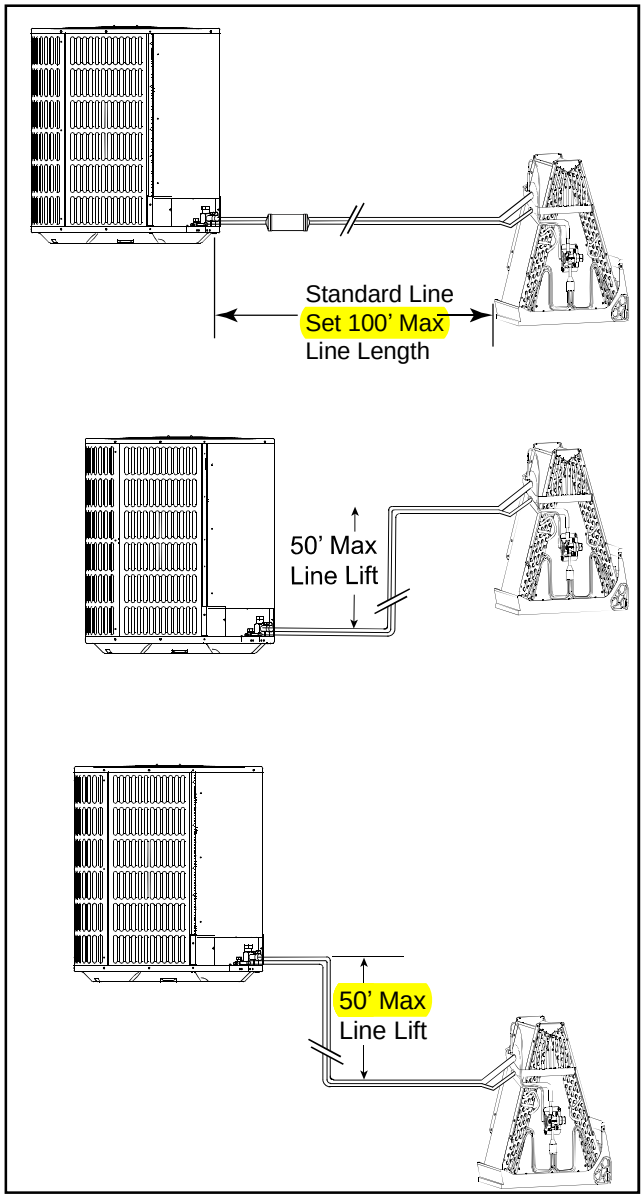

2.4 Location Restrictions

Ensure the top discharge area is unrestricted for at least 60 inches above the unit.

Clearance must be provided in front of the control box (access panels) and any other side requiring service.

Do not locate close to bedrooms, operational sounds may be objectionable.

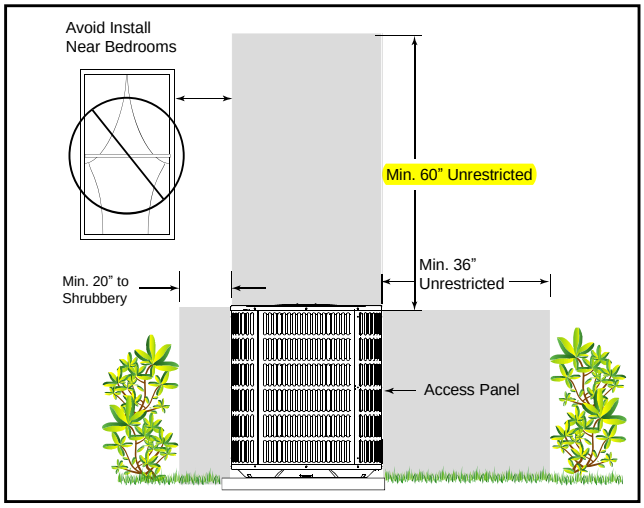

Position the outdoor unit a minimum of 20 inches from any wall or surrounding shrubbery to ensure adequate airflow.

Outdoor unit location must be far enough away from any structure to prevent excess roof runoff water from pouring directly on the unit.

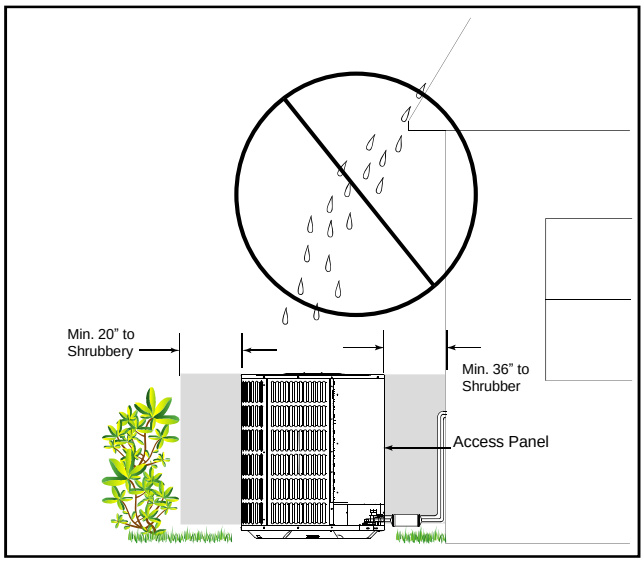

Cold Climate Considerations (Heat Pump Only)

Note: It is recommended that these precautions be taken for units being installed in areas where snow accumulation and prolonged below-freezing temperatures occur.

• Units should be elevated 3-12 inches above the pad or rooftop, depending on local weather. This additional height will allow drainage of snow and ice melted durlng defrost cycle prior to its refreezlng. Ensure that drain holes in unit base pan are not obstructed, preventing drainage of defrost water.
• If possible, avoid locations that are likely to accumulate snow drifts. if not possible, a snow drift barrier should be installed around the unit to prevent a build-up of snow on the sides of the unit.

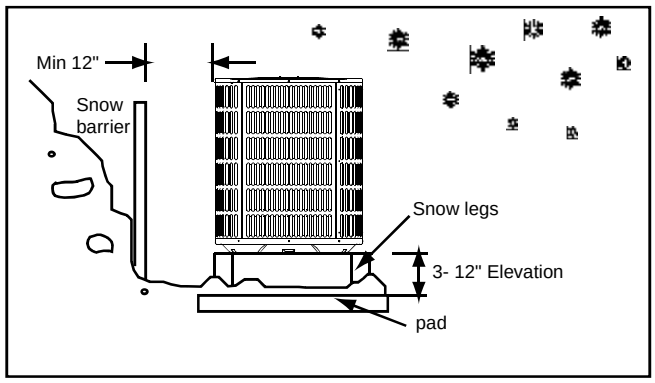

Section 3. Unit Preparation

3.1 Prepare The Unit For Installation

STEP 1 - Check for damage and report promptly to the carrier any damage found to the unit.

The charge port can be used to check to be sure the refrigerant charge has been retained during shipment.

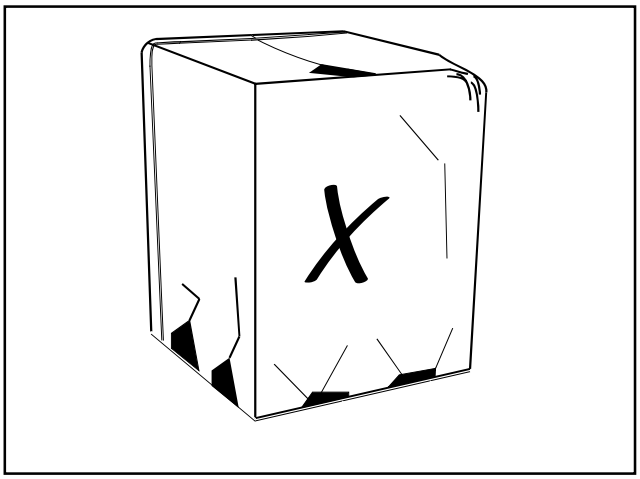

Section 4. Setting the Unit

4.1 Pad Installation

When installing the unit on a support pad, such as a concrete slab, consider the following:

- The pad should be at least 1-2” larger than the unit on all sides.
- The pad must be separate from any structure.
- The pad must be level.
- The pad should be high enough above grade to allow for drainage.
- The pad location must comply with National, State, and Local codes.

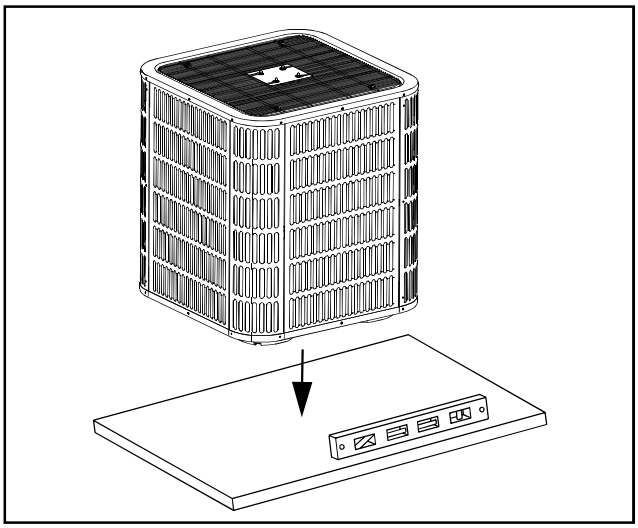

IMPORTANT NOTE:
These instructions are intended to provide a method to tie-down system to cement slab as a securing procedure for high wind areas. It is recommended to check Local Codes for tie-down methods and protocols.

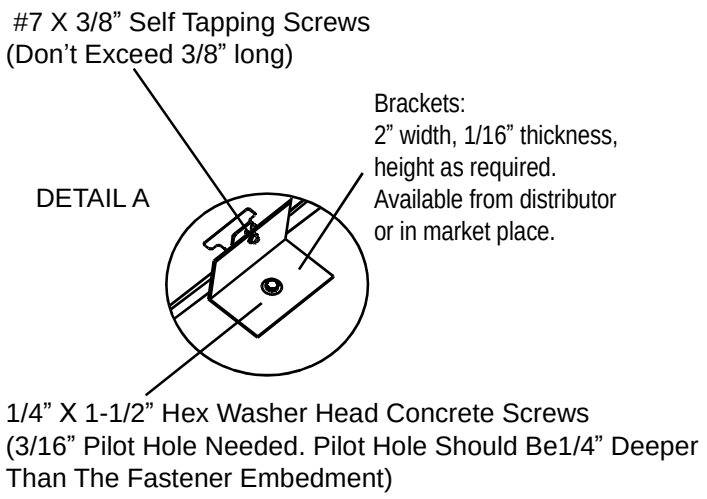

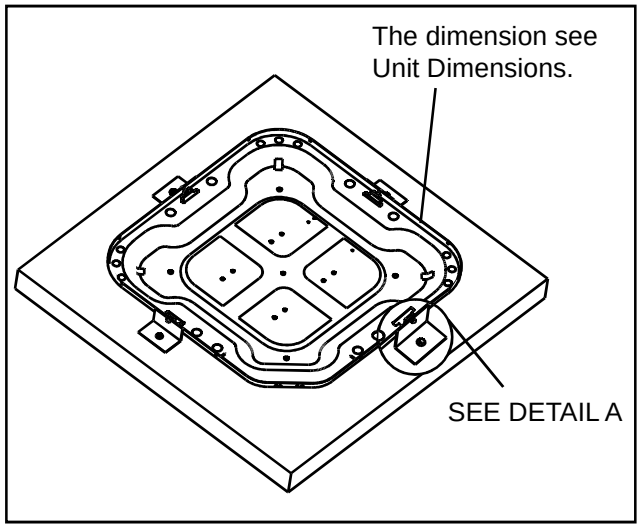

Section 5. Refrigerant Line Considerations

5.1 Refrigerant Line and Service Valve Connection Sizes

Table 5.1

	Line Sizes		Service Valve Connection Sizes	
Model	Suction Line	Liquid Line	Suction Line Connection	Liquid Line Connection
24	3/4	3/8	3/4	3/8
36	3/4	3/8	3/4	3/8
48	7/8	3/8	7/8	3/8
60	7/8	3/8	7/8	3/8

5.2 Required Refrigerant Line Length

Determine required line length.

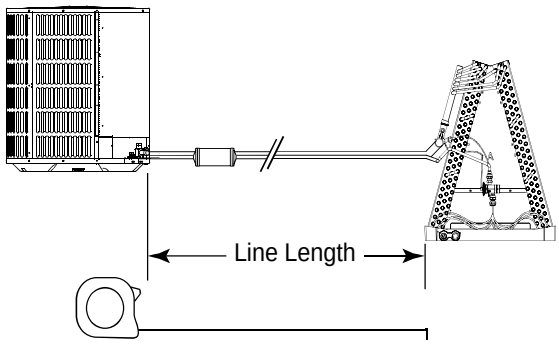

5.3 Refrigerant Line Insulation

Important: The Suction Line must always be insulated. DO NOT allow the Liquid Line and Suction Line to come in direct (metal to metal) contact.

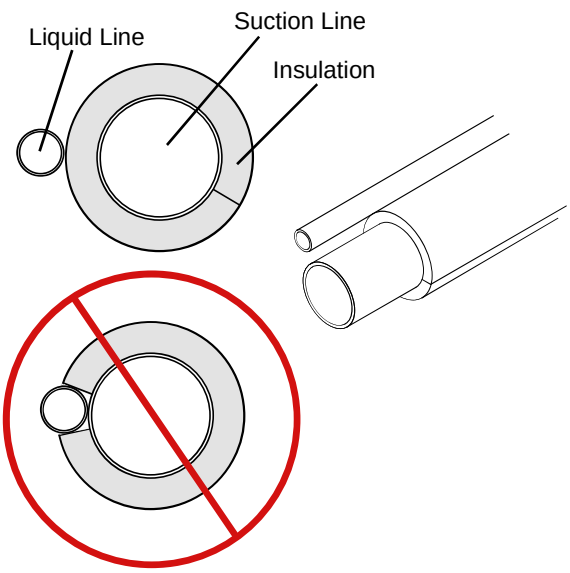

5.4 Reuse Existing Refrigerant Lines

⚠ CAUTION

If using existing refrigerant lines make certain that all joints are brazed, not soldered.

For retrofit applications, where the existing refrigerant lines will be used, the following precautions should be taken:

- Ensure that the refrigerant lines are the correct size. Refer to Section 2.2 listed and Table 5.1.
- Ensure that the refrigerant lines are free of leaks, acid, and oil.

Note: The manufacturer recommends installing only approved matched indoor and outdoor systems. All of the manufacturer's split systems are A.H.R.I. rated only with TXV indoor systems. Some of the benefits of installing approved matched indoor and outdoor split systems are maximum efficiency, optimum performance and the best overall system reliability.

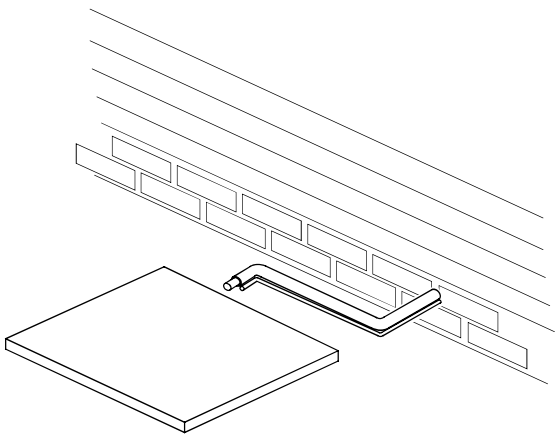

Section 6. Refrigerant Line Routing

6.1 Precautions

Important: Take precautions to prevent noise within the building structure due to vibration transmission from the refrigerant lines.

Comply with National, State, and Local Codes when isolating line sets from joists, rafters, walls, or other structural elements.

For Example:

- When the refrigerant lines have to be fastened to floor joists or other framing in a structure, use isolation type hangers.
- Isolation hangers should also be used when refrigerant lines are run in stud spaces or enclosed ceilings.
- Where the refrigerant lines run through a wall or sill, they should be insulated and isolated.
- Isolate the lines from all ductwork.
- Minimize the number of 90º turns.

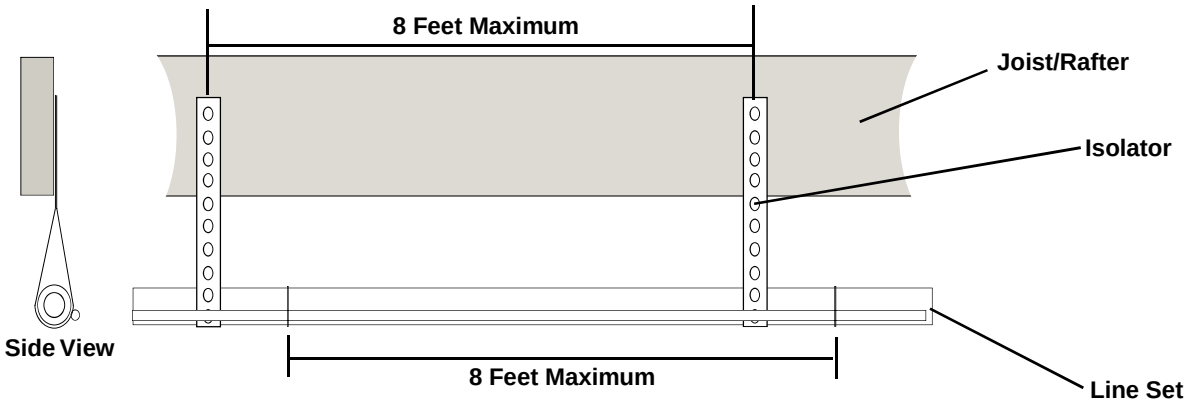

Secure Suction line from joists using isolators every 8 ft. Secure Liquid Line directly to Suction line using tape, wire, or other appropriate method every 8 ft.

Isolation From Joist/Rafter

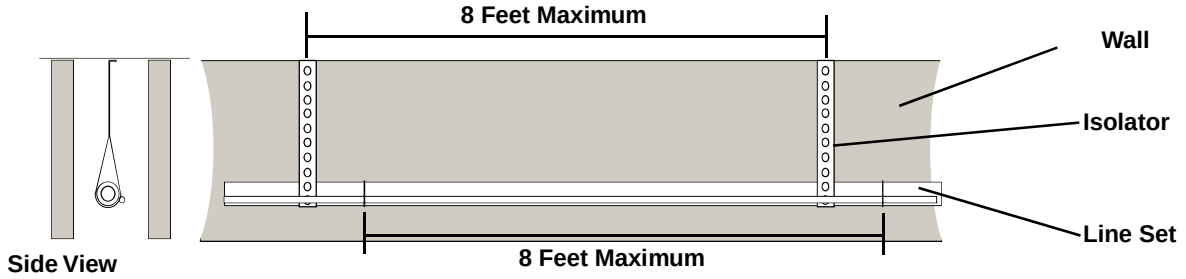

Secure Suction Line using isolators every 8 ft. Secure Liquid Line directly to Suction Line using tape, wire, or other appropriate method every 8 ft.

Isolation In Wall Spaces

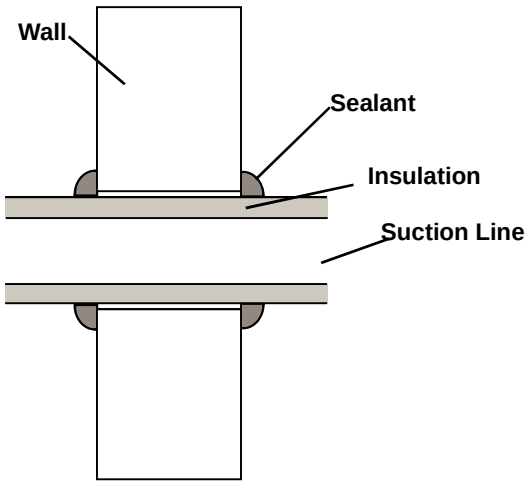

Isolation Through Wall

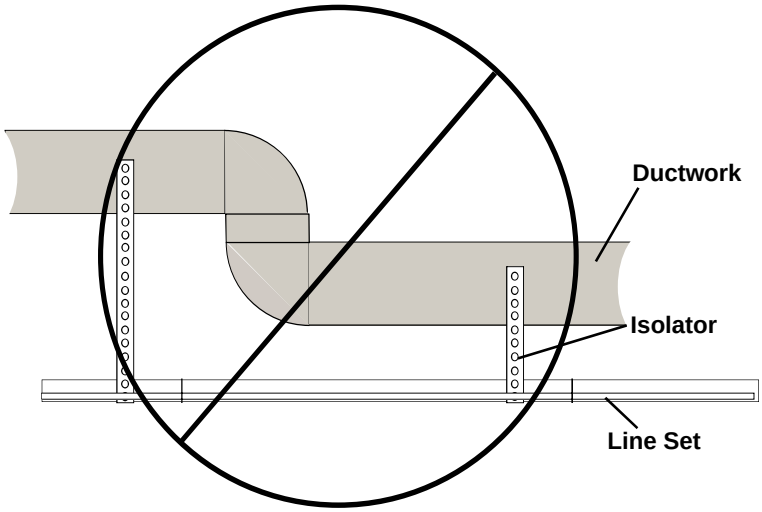

DO NOT hang line sets from ductwork

Section 7. Refrigerant Line Brazing

7.1 Braze The Refrigerant Lines

STEP 1 - Remove caps or plugs. Use a deburing tool to debur the pipe ends. Clean both internal and external surfaces of the tubing using an emery cloth.

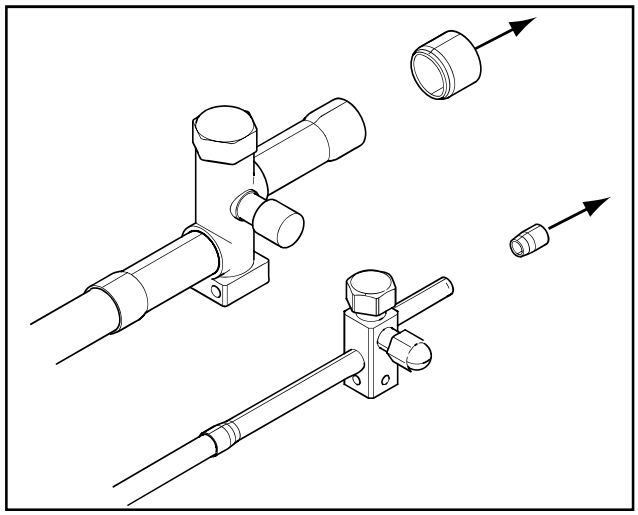

STEP 2 - Remove the pressure tap cap from both service valves.

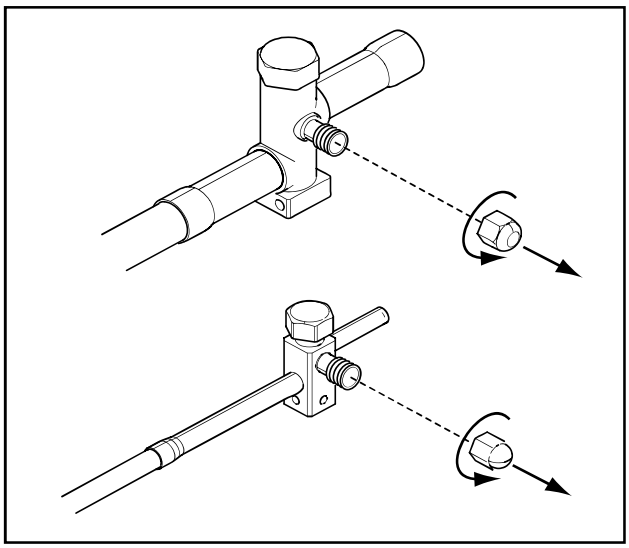

STEP 3 - Purge the refrigerant lines and indoor coil with dry nitrogen.

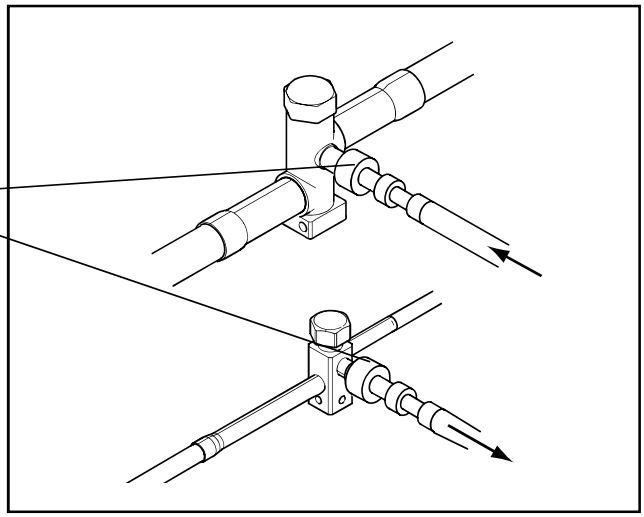

STEP 4 – Wrap a wet rag around the valve body to avoid heat damage and continue the dry nitrogen purge.

Braze the refrigerant lines to the service valves.

Check liquid line filter drier's directional flow arrow to confirm correct direction of refrigeration flow (away from outdoor unit and toward evaporator coil) as illustrated. Braze the filter drier to the Liquid Line.

Continue the dry nitrogen purge. Do not remove the wet rag until all brazing is completed.

Important: Remove the wet rag before stopping the dry nitrogen purge.

Note: Install drier in Liquid Line.

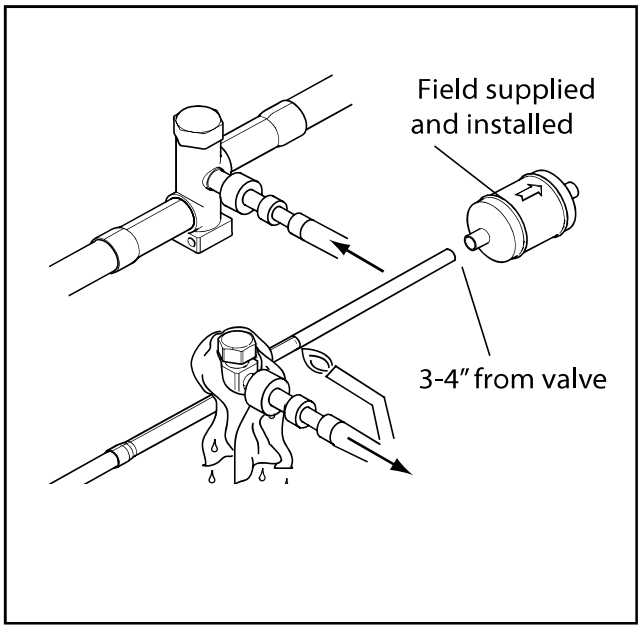

STEP 5 - Replace the pressure tap caps after the service valves have cooled.

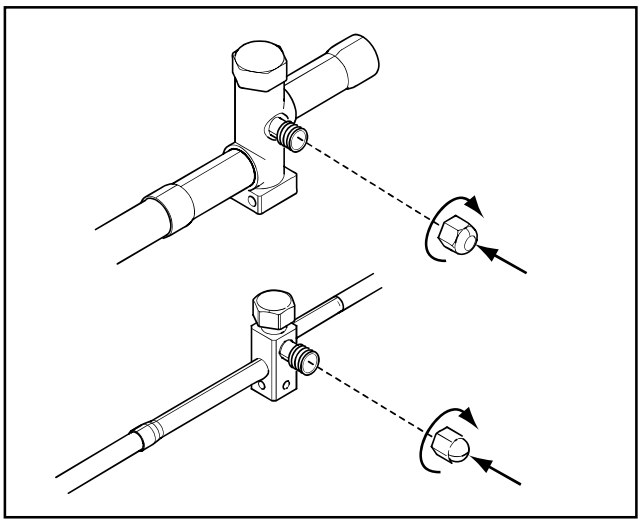

Section 8. Refrigerant Line Leak Check

8.1 Check For Leaks

STEP 1 –Pressurize the refrigerant lines and evaporator coil to 150 PSIG using dry nitrogen.

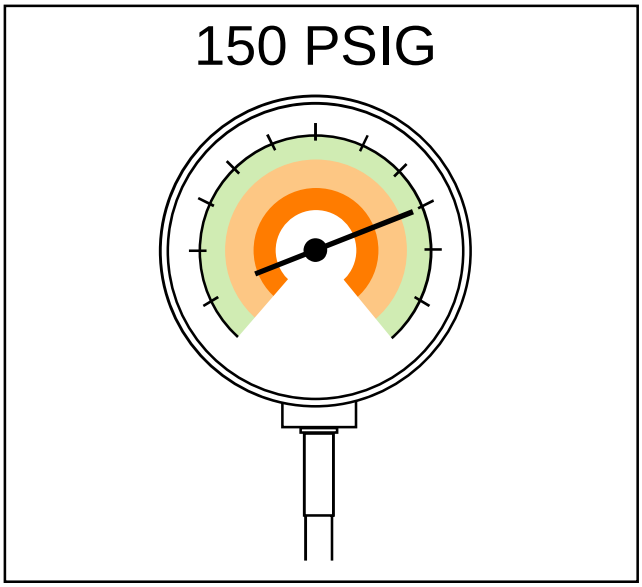

STEP 2 –Check for leaks by using a soapy solution or bubbles at each brazed location.

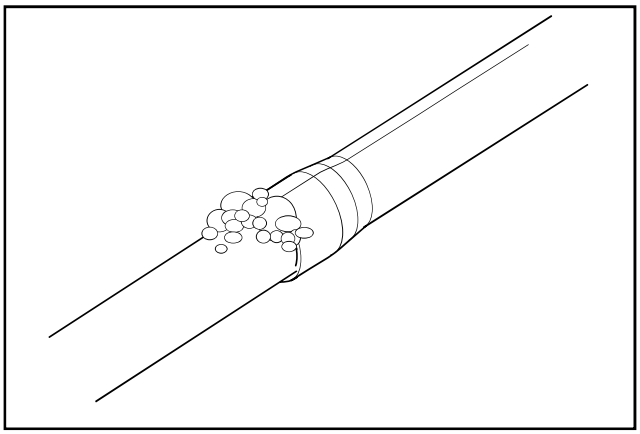

Section 9. Evacuation

9.1 Evacuate the Refrigerant Lines and Indoor Coil

Important: Do not open the service valves until the refrigerant lines and indoor coil leak check and evacuation are complete.

STEP 1 – Evacuate until the micron gauge reads no higher than 350 microns, then close the valve to the vacuum pump.

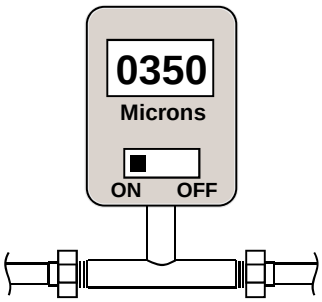

STEP 2 – Observe the micron gauge. Evacuation is complete if the micron gauge does not rise above 500 microns in one (1) minute.

Once evacuation is complete blank off the vacuum pump and micron gauge, and close the valves on the manifold gauge set.

Section 10. Service Valves

10.1 Open the Service Valves

⚠ WARNING

Extreme caution should be exercised when opening the Liquid Line Service Valve. Turn counterclockwise until the valve stem just touches the rolled edge. No torque is required. Failure to follow this warning will result in abrupt release of system charge and may result in personal injury and /or property damage.

Important: Leak check and evacuation must be completed before opening the service valves.

Important: The Suction Service Valve must be opened first BEFORE opening the Liquid Service Valve!

STEP 1 - Remove service valve cap.

STEP 2 - Fully insert hex wrench into the stem and back out counterclockwise until valve stem just touches the rolled edge (approximately five (5) turns.)

STEP 3 - Replace the valve stem cap to prevent leaks. Tighten finger tight plus an additional 1/6 turn.

STEP 4 - Repeat STEPS 1 - 3 for Liquid Service Valve.

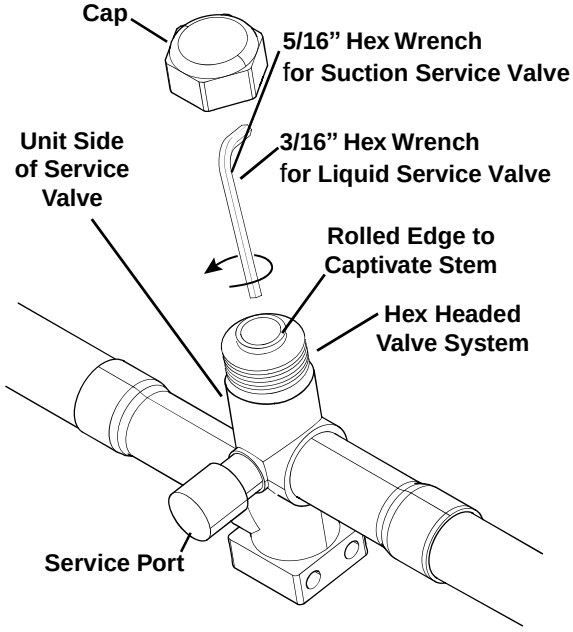

Section 11. Electrical - Low Voltage

11.1 Low Voltage Maximum Wire Length

Table 11.1 defines the maximum total length of low voltage wiring from the outdoor unit, to the indoor unit, and to the thermostat.

Field provided bushing or strain relief is required at the low voltage wire entry point.

Table 11.1

24 VOLTS	
WIRE SIZE	MAX. WIRE LENGTH
18 AWG	150 Ft.
16 AWG	225 Ft.
14 AWG	300 Ft.

11.2 Low Voltage Hook-up Diagrams

Air Handler Hook-up Diagram

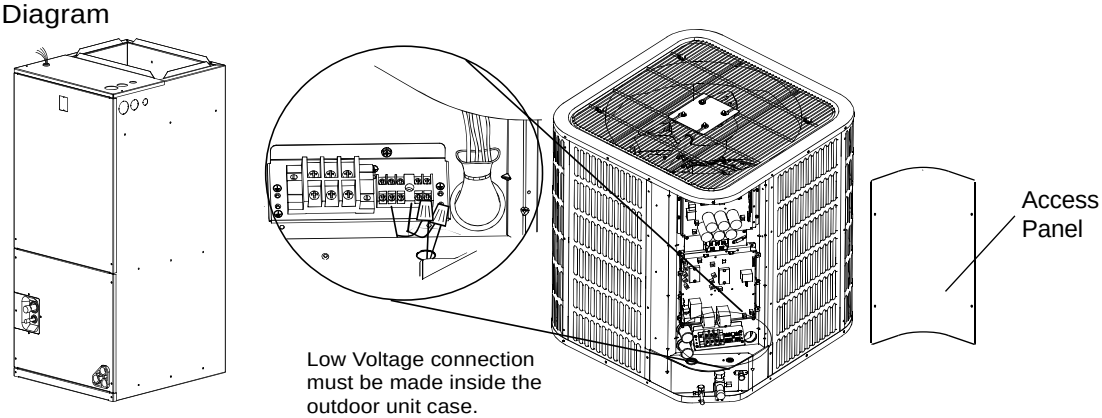

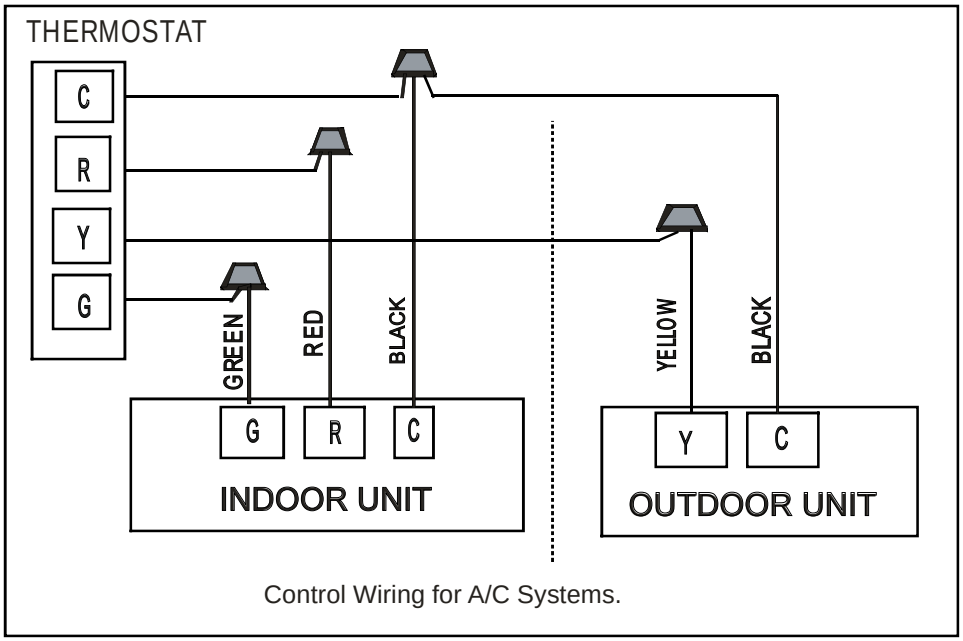

Control Wiring for A/C Systems.

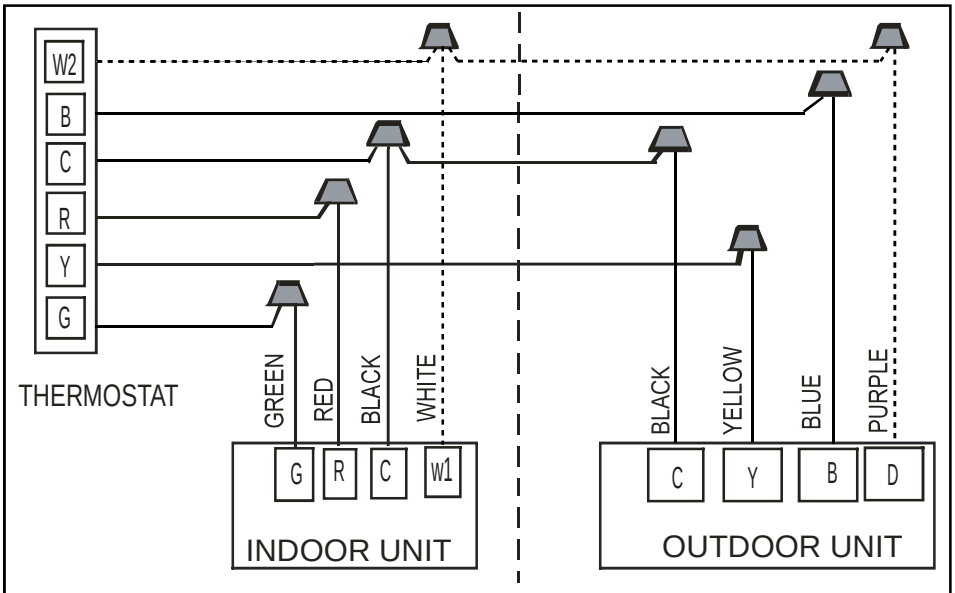

Control Wiring for H/P Systems.

Notes:

1. *Be sure power supply agrees with equipment nameplate.*
2. *Power wiring and grounding of equipment must comply with local codes.*
3. *Low voltage wiring to be No. 18 AWG minimum conductor.*
4. *"-----"The electric auxiliary heat connection.*

Section 12. Electrical - High Voltage

12.1 High Voltage Power Supply

⚠ WARNING

LIVE ELECTRICAL COMPONENTS!
During installation, testing, servicing, and trouble-shooting of this product, it may be necessary to work with live electrical components. Failure to follow all electrical safety precautions when exposed to live electrical components could result in death or serious injury.

The high voltage power supply must agree with the equipment nameplate.

Power wiring must comply with national, state, and local codes.

Follow instructions on unit wiring diagram located on the inside of the control box cover and in the Service Facts document included with the unit.

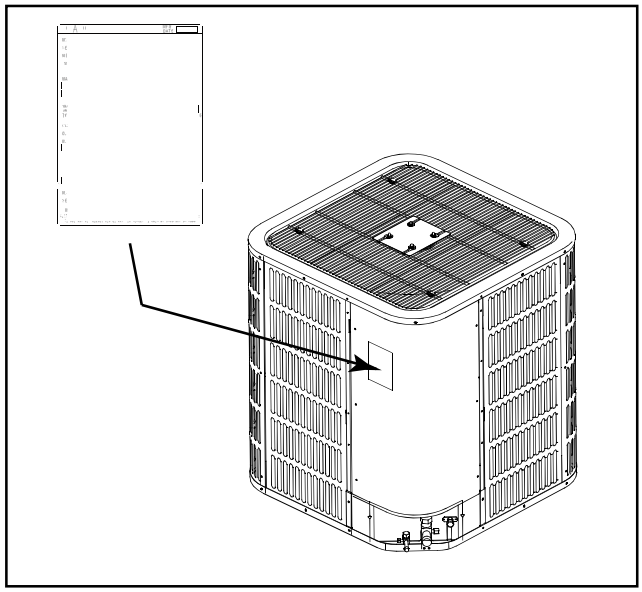

12.2 High Voltage Disconnect Switch

Install a separate disconnect switch at the outdoor unit.

Field provided flexible electrical conduit must be used for high voltage wiring.

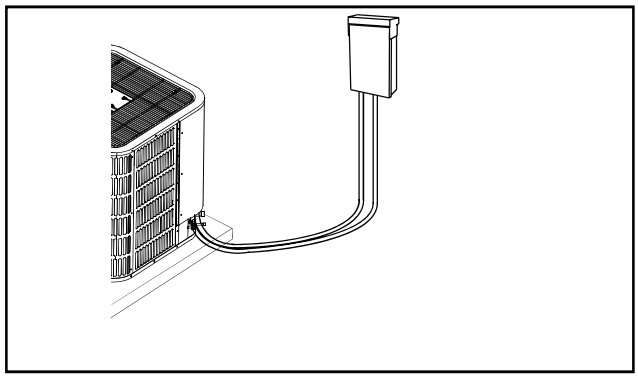

12.3 High Voltage Ground

Ground the outdoor unit per national, state, and local code requirements.

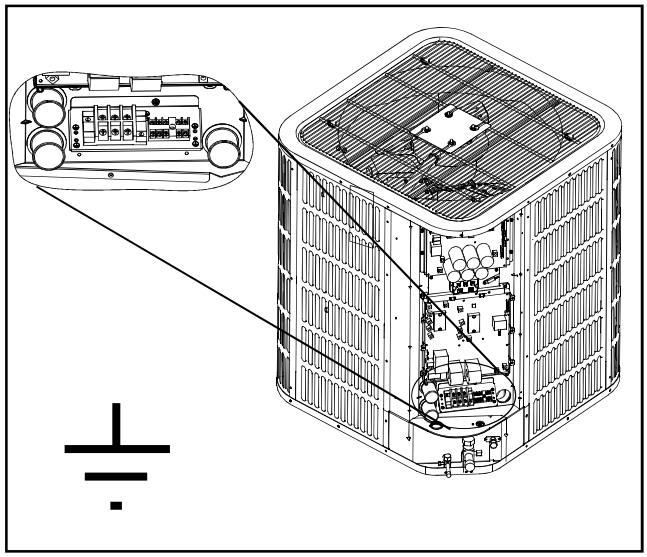

Section 13. Start Up

13.1 System Start Up

STEP 1 - Ensure Sections 7, 8, 9, 10, 11, 12, and 13 have been completed.

STEP 2 - Set System Thermostat to OFF.

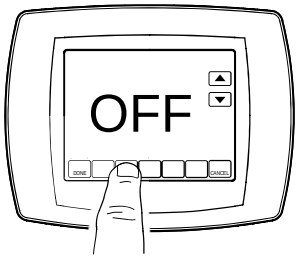

STEP 3 - Turn on disconnect to apply power to the indoor and outdoor units.

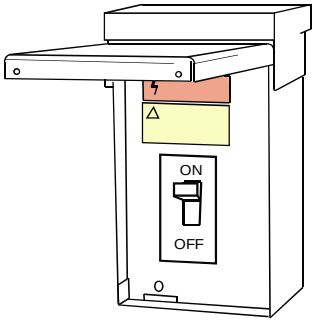

STEP 4 - Wait five (5) minutes before moving to Step 5 if no crankcase heater accessory is used,

Wait one (1) hour before starting the unit if compressor crankcase heater accessory is used and the Outdoor Ambient Temperature is below 70 ºF.

STEP 5 - Set system thermostat to ON.

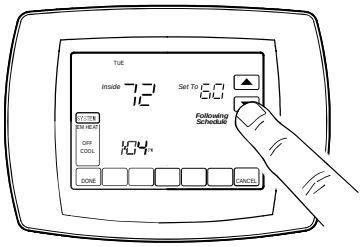

Section 14. System Charge Adjustment

14.1 charging: weigh-In Method

weigh-In Method can be used for the Initial installation, or anytime a system charge is being replaced. weigh-In Method can also be used when power is not available to the equipment site or operating conditions (indoor/Outdoor temperatures) are not In range to verify with the subcooling charging method.

A	B	C
Model	Factory Charge	charge multiplier for interconnecting refrigerant tube length
All models	(The data on nameplate)	0.6 oz/ft

Table 19. New Installations — calculating charge using the weigh-In method

1. Measure in feet the distance between the outdoor unit and the indoor unit and record on Line 1. Include the entire length of the line from the servIce valve to the IDU. 2. Enter the charge multiplier from column C. 3. Muitply the total length of refrigerant tubing (Line 1) tImes the value on step 2. Record the resulting value. 4. This Is the amount of refrigerant to weigh-in prior to opening the service valves.	New Installation weigh-In Method worksheeto 1. Line Length (ft) _____ 2. value from Column C x _____ 3. Refrlgerant(Step1 x Step2) = _____

Table 20. Sealed-System Repairs — calculating charge using the weigh-In method.

1. Meisure in feet the distance between the outdoor unit and the indoor unit and record on Line 1 Include the entire length of the line from the service valve to the IDU. 2. Enter the charge multiplIer from cotumn D. 3. MultIply the total length of refhgerant tubing (Line 1) times the value on Line 2. Record the result on Line 3 of the worksheet. 4. Record the value in column B to Line 5 of the worksheet. 5. Add the values from step 3, step 4,and record the resulting value on Line 5. ThIs is the amount of refrigerant to weigh-in.	New Installation weigh-In Method worksheet 1. Line Length (ft) _____ 2. value from ColumnD x _____ 3. Step 1 x step 2 = _____ 4. Factory charge (column B) + _____ 5. Refrlgerant (steps 3+4) = _____

Note: The only mode aperoved for setting validating system charge Is using Charging Mode-cooling. Outdoor Temperature must be between 55°F and 120°F with Indoor Temperature kept between 70°F and 80°F.

14.2 Subcooling charging and refrigerant adjustment in cooling (above 55 F outdoor temp.)

STEP 1 - Check the outdoor ambient temperatures.

Subcooling (in cooling mode) is the only recommended method of charging above 55ºF outdoor ambient temperatures.

Outdoor Temperature Above 55ºF

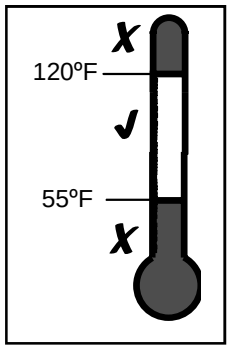

Outdoor Temp1

For outdoor ambient temperatures below 55ºF , use weigh-in charge method.
Note:It is important to return in the spring or summer to accurately charge the system in the cooling mode when outdoor ambient temperature is above 55ºF.

Outdoor Temperature Below 55ºF

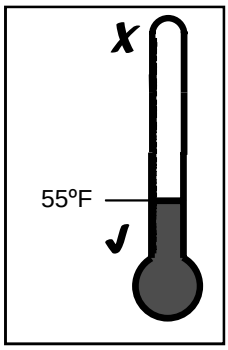

Outdoor Temp2

For best results the indoor temperature should be kept between 70ºF to 80ºF.

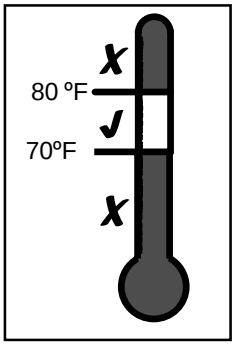

Indoor Temp

STEP 2 - Ensure Sections 7, 8, 9, 10, and 13 have been completed.

STEP 3 - Stabilize the system.

After starting the system in cooling mode, short press "FORCE"button, and " ⊢" symbol appears.Operate the system for a minimum of twenty (20) minutes,

Important:Whenever charge adjustment or expansion valve adjustment ,if unit is running continuously, the system must be operated for a minimum of five (5) minutes, otherwise repeat step 3.

STEP 4 - Calculate superheat value on suction valves(According to form)

Measured Suction Line Temp. = _____ºF
Measured Suction Line Pressure = _____ PSIG
Calculate superheat value = _____ºF

Note:Make sure the superheat value of suction valve should be above 12ºF, if the value is lower than this, indoor TXV should be adjusted.If the temperature is higher than 18ºF, we suggest to adjust indoor TXV. Repeat the steps above.
(If rejust the TXV See Appendix, repeat this step.)

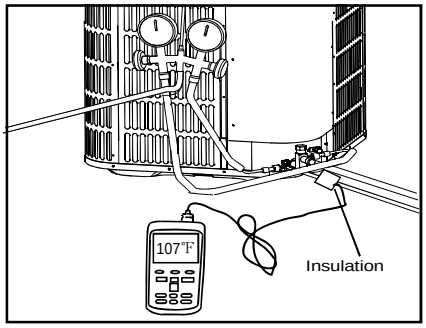

R-410A REFRIGERAN CHART								
SUCTION TEMP (℉)	FINAL SUPERHEAT(℉)							
	8	10	12	14	16	18	20	22
	SUCTION GAGE PRESSURE (PSI)							
40	101	97	93	89	86	82	78	75
42	105	101	97	93	89	86	82	78
44	110	105	101	97	93	89	86	82
46	114	110	105	101	97	93	89	86
48	118	114	110	105	101	97	93	89
50	123	118	114	110	105	101	97	93
52	128	123	118	114	110	105	101	97
54	133	128	123	118	114	110	105	101
56	138	133	128	123	118	114	110	105
58	143	138	133	128	123	118	114	110
60	148	143	138	133	128	123	118	114
62	153	148	143	138	133	128	123	118
64	159	153	148	143	138	133	128	123
66	164	159	153	148	143	138	133	128
68	170	164	159	153	148	143	138	133
70	176	170	164	159	153	148	143	138
72	182	176	170	164	159	153	148	143

STEP 5 - Calculate subcooling value on liquid valves(According to form)

Measured liquid Line Temp = _____ºF
Measured liquid Line Pressure = _____ PSIG
Calculate subcooling value = _____ºF

Note: If calculated subcooling value is lower than the design subcooling value, please add refrigerant. Repeat the steps above.

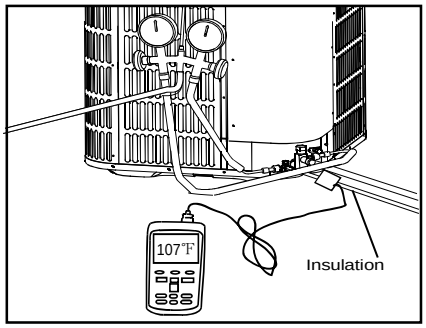

Model	24	36	48	60
Design subcooling	10ºF	10ºF	10ºF	10ºF

R-410A REFRIGERAN CHART								
SUCTION TEMP (℉)	FINALSUBCOOLING(℉)							
	6	7	8	9	10	11	12	13
	LIQUID GAGE PRESSURE (PSI)							
55	173	176	179	182	185	188	191	195
60	188	191	195	198	201	204	208	211
65	204	208	211	215	218	221	225	229
70	221	225	229	232	236	239	243	247
75	239	243	247	251	255	259	262	266
80	259	262	266	270	275	279	283	287
85	279	283	287	291	295	300	304	309
90	300	304	309	313	318	322	327	331
95	322	327	331	336	341	346	351	355
100	346	351	355	360	365	370	376	381
105	370	376	381	386	391	397	402	407
110	397	402	407	413	418	424	430	435
115	424	430	435	441	447	453	459	465
120	453	459	465	471	477	483	489	496
125	483	489	496	502	508	515	521	528

STEP 6 - Adjust refrigerant level to attain proper gage pressure.

Add refrigerant if the design subcooling is lower than the chart value.

1. Connect gages to refrigerant bottle and unit as illustrated.
2. Purge all hoses.
3. Open bottle.
4. Stop adding refrigerant when subcooling. matches the charging chart Final Subcooling value.

Recover refrigerant if the subcooling is higher than the chart value.

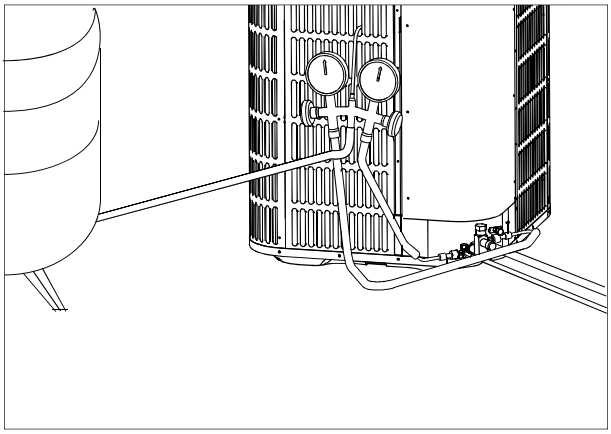

STEP 7 - Stabilize the system.

1. Wait 5 minutes for the system condition to stabilize between adjustments.

Note: When the subcooling match the chart, the system is properly charged.

2. Remove gages.
3. Replace service port caps to prevent leaks. Tighten finger tight plus an additional 1/6 turn.

STEP 8 - Record System Information for reference.

Record system pressures and temperatures after charging is complete.

Outdoor model number = _____

Measured Outdoor Ambient = _____ ℉

Measured Indoor Ambient = _____ ℉

Measured Liquid Line Temp = _____ ℉

Measured Suction Line Temp = _____ ℉

Liquid Gage Pressure = _____ PSIG

Suction Gage Pressure = _____ PSIG

Section 15 System operation and Troubleshooting

1. Control logic description

● The variable speed system adopts the same control communication command as that of common heat pump and air condition unit , it is the 24V control command .

● The speed of compressor is controlled by outdoor unit itself according to the pressure transducer. Usually , to ensure stable and adequate capacity, the speed will change according to the evaporating pressure in cooling and according to the condensing pressure in heating , another, the pressure target may adjust automatically based on the compressor operating so that the capacity can better meet the needs. It can choose the target setting according to dehumidification and high capacity demands by manually adjusting the code.

SW4

ON				
OFF	1	2	3	4

2. Sensor

● T3(Outdoor coil temperature) and T4(ambient temperature, heat pump only) see TABLE A

● T5(compressor discharge temperature) and Tf(IPM radiator temperature) see TABLE B.

● Pressure Transducer(cooling only) see TABLE C, Pressure Transducer(heat pump only) see TABLE D.

3. Sensor description

A working T3 Sensor is required for:

● Operating protection (high temp./low temp.)

● Outdoor fan control(cooling)

● Defrost (heat pump only)

● Ambient temp forecast (Cooling only)

A working T4 Sensor is required for(Heat pump only):

● Operating condition permission

● Defrosting condition determination

● Outdoor fan control(heating mode, Heat pump only)

A working T5 Sensor is required for:

● Protection(high temp./low temp.)

● Outside Electronic Expansion Valve control (Heat pump only)

A working Tf Sensor is required for:

● Module temp. protection(high temp.)

A working Pressure Transducer Sensor is required for:

● Operating frequency control

● Outside Electronic Expansion Valve control (Heat pump only)

● High pressure protection(heating mode, Heat pump only)

● Low pressure protection(cooling mode)

4、Defrost description (Heat Pump only)

● The demand defrost control measures the coil temperature with a sensor locatde on the heat pump coil.A second sensor located outside the outdoor coil is used to measure outdoor ambient temperature.
The demand of defrost is computed by the coil temperature and outdoor ambient temperature ,also , by the running time and outdoor ambient temperature, by the running time and high pressure when hing pressure is lower than a certain value.

● Enter defrosting

The following 3 situations were determined to enter defrosting:

①Outdoor coil temp. T3<34°F, and satisfy a certain correspondence of T4 ambient temp.

②When operating time accumulates to a certain value. For different Ambient Temp. T4, time settings are different, when T4<-23°F, cumulative time is 4h, when T4≥-23°F and T4＜42°F the cumulative time is 2h .

③ When high pressure lasts low, the situation that the saturation temperature of high pressure lower than 82°F lasts for 20 min determines to enter defrosting.

● Dial code SW5：

Defrosting quit

According to outdoor coil temp.T3 is up to 64°F and lasts for 1 min. Or defrosting time is up to 8 min.

● Defrosting control choice

Dial code SW5 can adjust and set the time that enters and quits defrosting

In general, adjust dial code to ON can enhance the ability of defrosting.

SW5

ON		
OFF	1	2

Defrosting choice	SW5-1	SW5-2	Remarks
ON	Operating time is reduced by 10%	Defrosting extended for 60 seconds	
OFF	Normal	Normal	Default
Remarks	Enter defrost	Quit defrost	

● Manual defrosting (Heat Pump only)

1.System must be running with demand from the thermostat.

2.Forced Defrost Test can be initiated when the running time must be longer than 8 minutes in heat mode only.

3.Press “FORCE” key for 6 secends to begin forced defrost.

4.Execute Forced Defrost.(Please wait 40 secends before defrost)

5.When test begins,the displays will display “dF”.(the display procedure:the running speed of 40S-- “dF”-- the running speed)

6.Forced Defrost Test is complete automatically ,and the displys is the running speed.

7.If Forced Defrost is needed again , you can repeat step 3 after 5 minutes.

5. Compressor Crankcase heater description

Refrigerant migration during the off cycle can result in a noisy start up. Add a crankcase heater to minimize refrigeration migration, and to help eliminate any start up noise or bearing “wash out”.

All heaters must be located on the lower half of the compressor shell. Its purpose is to drive refrigerant from the compressor shell during long off cycles, thus preventing damage to the compressor during start-up.

At initial start-up or after extended shutdown periods, make sure the heater is energized for at least 12 hours before the compressor is started. (Disconnect switch on and wall thermostat off.)

● **The crankcase heating start condition:**

Start if crankcase heating zone can satisfy one of the three conditions,

1. First time to power on and T5>104℉
2. In process of defrosting
3. Compressor stops running for 4h and the outdoor ambient temp. T4 once lower than 50℉ or T5< 104℉ .

● **The crankcase heating stop must meet condition:**

Air discharge temp. T5≥113℉

6. Reversing valve introduction (heat pump only)

● Reversing valve energizes at the heating conditions,and cut off at the cooling condition.

7. Protection function introduction

● Outdoor coil temperature protection(T3)

T3>143.6°F, compressor stop working; T3< 129.2°F, compressor start working.

● Ambient temperature protection(T4) (Cooling only system T4=T3)

When 50°F≤ T4 < 140 °F, the units can work at the cooling condition.

When -4°F≤ T4 < 86 °F, the units can work at the heating condition.

When T4 < 6.8 °F,If the electrical heater kit is installed in the indoor unit, the outdoor unit would provide a signal to drive up the heater.

● Discharge temperature protection(T5)

When discharge temp. > 239 °F, the compressor will stop at the cooling condition.

When discharge temp. < 194 °F, the compressor will restart at the cooling condition.

When discharge temp. > 221 °F, the compressor will stop at the heating condition.

When discharge temp. < 167 °F, the compressor will restart at the heating condition.

● High pressure protection (HPS)

When high pressure > 580 PSIG, the compressor and outdoor fan will stop.

When high pressure < 435 PSIG, the compressor and outdoor fan will restart.

● Low pressure protection(PT)

Low pressure < 43.5 PSIG lasting for 5 min in cooling model, the compressor and outdoor fan will stop. System will run again after 6 minutes.

● Module temperature protection (TF)

When TF>176 °F, the compressor and outdoor fan will stop.

When TF<145 °F, the compressor and outdoor fan will restart.

8. Fault code table

CODE	FAULT DESCRIPTION
E4	Temperature sensor fault(T3 /T4/T5/TF)
E5	High/low voltage protection
E6	DC fan motor fault
Eb	System lockup, 2 times(E6),protection in 10 minutes
E7	Compressor discharge sensor(T5) isseated fault
E9	EEPROM fault
H0	Communication fault in main control chip
H3	3 times (P3) protection in 120 minutes,system lockup
H4	3 times (P6) protection in 60 minutes,system lockup
H5	5 times (P2) protection in 100 minutes,system lockup
H6	3 times (P4) protection in 100 minutes,system lockup
H8	Pressure transducer(PT) short or open fault
Hb	High pressure(PT) protection in Heating
HH	2 times(PH) protection in 200 minutes,system lockup
P0	The module radiator temperature (TF)protection
P1	High pressure (HPS) protection
P2	Low pressure(PT) Protection
P3	Compressor over current protection
P4	High compressor discharge temperature(T5) protection
P5	High condensor coil temp. (T3) protection
P6	IPM module protection
P8	Hurricane protection of the DC fan motor
PH	Low discharge superheat protection
PC	Reversing valve fault protection
F1	High pressure switch(HPS) fault
F3	5 times (P5) protection in180 minutes,system lockup
F4	3 times (P0) protection in 120 minutes,system lockup
F5	5 times (Hb) protection in 180 minutes,system lockup
C3	Condensor coil sensor(T3) is seated fault in cooling
C4	3 times (C3) protection in 120 minutes,system lockup
C5	2 times (E7) protection in 180 minutes,system lockup
C6	2 times (PC) protection in 180 minutes,system lockup
CE	5 times (P1) protection in 150 minutes,system lockup
L0-L9	IPM module protection or frequent power on/of
H	Indication under charge model
L	Running indication under T3 limited condition
D	Running indication under T5 limited condition
P	Running indication under compressor ratio limited conditio
F	Running indication under Tf limited condition
C	Running indication under current limited condition
U	Running indication under low voltage limited condition
H	Running indication under high pressure(PT) limited condition in heatin
A	Running indication under return oil model
dF	Running indication under defrost model

9. Parameter point check table

1、Shift to display content of data code pipe when pressing point check key shortly(check key). Display the next set of data when press the key once. The display content is accordance with the sequence.
2、There're 3 digits for LED. The first digit is sequence(only display units digit, recycling display), the second and third digits are values. For example, the 8th item is operating low pressure saturation temperature. The 11th item is operating low pressure. For detailed meanings, please refer to the point check table.3. After staying for 20s, it will recover to the normal status display
4、For normal status display, the last 2 digits of nixie tube will display ambient temp when the unit is in standby status(the first nixie tube has no display). During operating, last 2 digits of nixie tube will display operating frequency.(If there's system protection, the first digit of nixie tube will display status code, details for code meaning, please refer to the Fault code table)

No.	Point check content	Example	Remark
0	Outdoor unit capacity	C3	Model+RT
1	Outdoor unit mode	2	0 standby, 2 cooling, 3 heating
2	Outdoor unit set compressor speed		
3	opening of EXV		Actual value
4	T3(outdoor coil temp.)		
5	T4 (outdoor ambient temp.)		
6	T5(compressor discharge temp.)		
7	Reserved		
8	Te (evaporating temp.)		
9	Tc (condensing temp.)		
10	Tf (module temp.)		
11	Pe (evaporating pressure)		Actual value *10
12	Pc (evaporating pressure)		Actual value *10
13	Compressor discharge superheat		
14	Reserved		
15	Reserved		
16	compressor current		
17	Reserved		
18	Fan speed		
19	Reserved		
20	Reserved		
21	Reserved		
22	Spit oil quantity		Actual value /10
23	The last time Fault code		
24	Software version		
25	Remark"--"		

TABLE A

TEMP F	TEMP C	RESISTANCE kΩ	VOLTS DC	TEMP F	TEMP C	RESISTANCE kΩ	VOLTS DC
-5	-20.6	107.732	4.65	90	32.2	7.225	2.36
0	-17.8	93.535	4.6	95	35	6.401	2.21
5	-15	79.521	4.54	100	37.8	5.683	2.07
10	-12.2	67.795	4.47	105	40.6	5.057	1.93
15	-9.4	57.948	4.39	110	43.3	4.509	1.79
20	-6.7	49.652	4.3	115	46.1	4.028	1.67
25	-3.9	42.645	4.21	120	48.9	3.606	1.55
30	-1.1	36.710	4.1	125	51.7	3.233	1.43
40	4.4	27.386	3.86	130	54.4	2.902	1.32
45	7.2	23.732	3.73	135	57.2	2.610	1.22
50	10	20.610	3.59	140	60	2.350	1.13
55	12.8	17.939	3.45	145	62.8	2.119	1.04
60	15.6	15.648	3.3	150	65.6	1.914	0.96
65	18.3	13.681	3.15	155	68.3	1.731	0.88
70	21.1	11.987	2.99	160	71.1	1.574	0.82
75	23.9	10.527	2.83	165	73.9	1.416	0.75
80	26.7	9.265	2.67	170	76.7	1.276	0.68
85	29.4	8.172	2.52				

TABLE B

TEMP F	TEMP C	RESISTANCE kΩ	VOLTS DC	TEMP F	TEMP C	RESISTANCE kΩ	VOLTS DC
-5	-20.6	600.134	4.93	140	60	13.643	3.14
0	-17.8	505.551	4.92	145	62.8	12.359	3.03
5	-15	427.463	4.91	150	65.6	11.214	2.91
10	-12.2	362.739	4.89	155	68.3	10.227	2.8
15	-9.4	308.891	4.87	160	71.1	9.308	2.68
20	-6.7	265.398	4.85	165	73.9	8.485	2.56
25	-3.9	227.481	4.83	170	76.7	7.746	2.45
30	-1.1	195.601	4.8	175	79.4	7.105	2.34
35	1.7	168.707	4.77	180	82.2	6.504	2.23
40	4.4	146.695	4.74	185	85	5.963	2.13
45	7.2	127.258	4.7	190	87.8	5.474	2.02
50	10	110.707	4.66	195	90.6	5.032	1.92
55	12.8	96.572	4.61	200	93.3	4.645	1.83
60	15.6	84.465	4.56	205	96.1	4.28	1.73
65	18.3	74.411	4.51	210	98.9	3.949	1.64
70	21.1	65.408	4.45	215	101.7	3.648	1.56
75	23.9	57.634	4.39	220	104.4	3.383	1.48
80	26.7	50.904	4.32	225	107.2	3.133	1.4
85	29.4	45.258	4.24	230	110	2.904	1.32
90	32.2	40.152	4.16	235	112.8	2.694	1.25
95	35	35.699	4.08	240	115.6	2.503	1.18
100	37.8	31.807	3.99	245	118.3	2.334	1.12
105	40.6	28.398	3.89	250	121.1	2.172	1.06
110	43.3	25.506	3.8	255	123.9	2.024	1
115	46.1	22.861	3.7	260	126.7	1.888	0.95
120	48.9	20.529	3.59	265	129.4	1.767	0.9
125	51.7	18.47	3.48	270	132.2	1.651	0.85
130	54.4	16.708	3.37	275	135	1.544	0.8
135	57.2	15.085	3.26	280	137.8	1.446	0.76

TABLE C

For AC model: NSK-BD020I V=2*MPa+0.5					
No.	V	Te	Pe	No.	V
		℃	MPa		
1	1.04	-22	0.27	47	2
2	1.07	-21	0.28	48	2.02
3	1.1	-20	0.3	49	2.05
4	1.11	-19.5	0.31	50	2.08
5	1.13	-19	0.31	51	2.11
6	1.14	-18.5	0.32	52	2.14
7	1.16	-18	0.33	53	2.16
8	1.17	-17.5	0.34	54	2.19
9	1.19	-17	0.35	55	2.22
10	1.21	-16.5	0.35	56	2.25
11	1.22	-16	0.36	57	2.28
12	1.24	-15.5	0.37	58	2.31
13	1.26	-15	0.38	59	2.34
14	1.27	-14.5	0.39	60	2.37
15	1.29	-14	0.4	61	2.4
16	1.31	-13.5	0.41	62	2.44
17	1.33	-13	0.41	63	2.47
18	1.35	-12.5	0.42	64	2.5
19	1.37	-12	0.43	65	2.53
20	1.38	-11.5	0.44	66	2.56
21	1.4	-11	0.45	67	2.6
22	1.42	-10.5	0.46	68	2.63
23	1.44	-10	0.47	69	2.67
24	1.46	-9.5	0.48	70	2.7
25	1.48	-9	0.49	71	2.74
26	1.5	-8.5	0.5	72	2.77
27	1.52	-8	0.51	73	2.81
28	1.54	-7.5	0.52	74	2.84
29	1.57	-7	0.53	75	2.88
30	1.59	-6.5	0.54	76	2.92
31	1.61	-6	0.55	77	2.95
32	1.63	-5.5	0.57	78	2.99
33	1.65	-5	0.58	79	3.03
34	1.68	-4.5	0.59	80	3.07
35	1.7	-4	0.6	81	3.1
36	1.72	-3.5	0.61	82	3.14
37	1.75	-3	0.62	83	3.18
38	1.77	-2.5	0.64	84	3.22
39	1.79	-2	0.65	85	3.26
40	1.82	-1.5	0.66	86	3.3
41	1.84	-1	0.67	87	3.35
42	1.87	-0.5	0.68	88	3.39
43	1.89	0	0.7	89	3.43
44	1.92	0.5	0.71	90	3.47
45	1.94	1	0.72	91	3.51
46	1.97	1.5	0.74	92	3.56
17	80.2376	74	8.4881	132	1.4937
18	76.6616	75	8.166	133	1.4551
19	73.2636	76	7.8945	134	1.4177
20	70.0337	77	7.6334	135	1.3813
21	66.9628	78	7.382	136	1.3461
22	64.0424	79	7.1401	137	1.3118
23	61.2643	80	6.9072	138	1.2786
24	58.6208	81	6.683	139	1.2463
25	56.1048	82	6.467	140	1.215
26	53.7095	83	6.259		

TABLE D

For HP model: NSK-BD035I V=(8/7)*MPa+0.5											
No.	V	Te/Tc	Pe/Pc	No.	V	Te/Tc	Pe/Pc	No.	V	Te/Tc	Pe/Pc
		℃	MPa			℃	MPa			℃	MPa
1	0.69	-30	0.17	56	1.37	2.5	0.76	111	2.54	30	1.78
2	0.7	-29	0.18	57	1.39	3	0.78	112	2.56	30.5	1.81
3	0.72	-28	0.19	58	1.4	3.5	0.79	113	2.59	31	1.83
4	0.73	-27	0.2	59	1.42	4	0.8	114	2.62	31.5	1.86
5	0.75	-26	0.22	60	1.43	4.5	0.82	115	2.65	32	1.88
6	0.76	-25	0.23	61	1.45	5	0.83	116	2.68	32.5	1.91
7	0.78	-24	0.24	62	1.47	5.5	0.85	117	2.71	33	1.93
8	0.79	-23	0.25	63	1.48	6	0.86	118	2.74	33.5	1.96
9	0.81	-22	0.27	64	1.5	6.5	0.88	119	2.77	34	1.98
10	0.82	-21	0.28	65	1.52	7	0.89	120	2.8	34.5	2.01
11	0.84	-20	0.3	66	1.53	7.5	0.91	121	2.83	35	2.04
12	0.85	-19.5	0.31	67	1.55	8	0.92	122	2.86	35.5	2.06
13	0.86	-19	0.31	68	1.57	8.5	0.94	123	2.89	36	2.09
14	0.87	-18.5	0.32	69	1.59	9	0.95	124	2.92	36.5	2.12
15	0.88	-18	0.33	70	1.61	9.5	0.97	125	2.95	37	2.15
16	0.89	-17.5	0.34	71	1.62	10	0.98	126	2.98	37.5	2.17
17	0.89	-17	0.35	72	1.64	10.5	1	127	3.02	38	2.2
18	0.9	-16.5	0.35	73	1.66	11	1.02	128	3.05	38.5	2.23
19	0.91	-16	0.36	74	1.68	11.5	1.03	129	3.08	39	2.26
20	0.92	-15.5	0.37	75	1.7	12	1.05	130	3.12	39.5	2.29
21	0.93	-15	0.38	76	1.72	12.5	1.07	131	3.15	40	2.32
22	0.94	-14.5	0.39	77	1.74	13	1.08	132	3.18	40.5	2.35
23	0.95	-14	0.4	78	1.76	13.5	1.1	133	3.22	41	2.38
24	0.96	-13.5	0.41	79	1.78	14	1.12	134	3.25	41.5	2.41
25	0.97	-13	0.41	80	1.8	14.5	1.14	135	3.29	42	2.44
26	0.98	-12.5	0.42	81	1.82	15	1.15	136	3.32	42.5	2.47
27	0.99	-12	0.43	82	1.84	15.5	1.17	137	3.36	43	2.5
28	1.01	-11.5	0.44	83	1.86	16	1.19	138	3.39	43.5	2.53
29	1.02	-11	0.45	84	1.88	16.5	1.21	139	3.43	44	2.56
30	1.03	-10.5	0.46	85	1.9	17	1.23	140	3.46	44.5	2.59
31	1.04	-10	0.47	86	1.92	17.5	1.24	141	3.5	45	2.62
32	1.05	-9.5	0.48	87	1.94	18	1.26	142	3.54	45.5	2.66
33	1.06	-9	0.49	88	1.97	18.5	1.28	143	3.57	46	2.69
34	1.07	-8.5	0.5	89	1.99	19	1.3	144	3.61	46.5	2.72
35	1.09	-8	0.51	90	2.01	19.5	1.32	145	3.65	47	2.76
36	1.1	-7.5	0.52	91	2.03	20	1.34	146	3.69	47.5	2.79
37	1.11	-7	0.53	92	2.06	20.5	1.36	147	3.73	48	2.82
38	1.12	-6.5	0.54	93	2.08	21	1.38	148	3.77	48.5	2.86
39	1.13	-6	0.55	94	2.1	21.5	1.4	149	3.8	49	2.89
40	1.15	-5.5	0.57	95	2.13	22	1.42	150	3.84	49.5	2.93
41	1.16	-5	0.58	96	2.15	22.5	1.44	151	3.88	50	2.96
42	1.17	-4.5	0.59	97	2.17	23	1.46	152	3.93	50.5	3
43	1.19	-4	0.6	98	2.2	23.5	1.49	153	3.97	51	3.03
44	1.2	-3.5	0.61	99	2.22	24	1.51	154	4.01	51.5	3.07
45	1.21	-3	0.62	100	2.25	24.5	1.53	155	4.05	52	3.1
46	1.23	-2.5	0.64	101	2.27	25	1.55	156	4.09	52.5	3.14
47	1.24	-2	0.65	102	2.3	25.5	1.57	157	4.13	53	3.18
48	1.25	-1.5	0.66	103	2.32	26	1.6	158	4.18	53.5	3.22
49	1.27	-1	0.67	104	2.35	26.5	1.62	159	4.22	54	3.25
50	1.28	-0.5	0.68	105	2.38	27	1.64	160	4.26	54.5	3.29
51	1.3	0	0.7	106	2.4	27.5	1.66	161	4.31	55	3.33
52	1.31	0.5	0.71	107	2.43	28	1.69	162	4.35	55.5	3.37
53	1.33	1	0.72	108	2.45	28.5	1.71	163	4.39	56	3.41
54	1.34	1.5	0.74	109	2.48	29	1.73	164	4.44	56.5	3.45
55	1.36	2	0.75	110	2.51	29.5	1.76	165	4.48	57	3.49

For 24/36k model

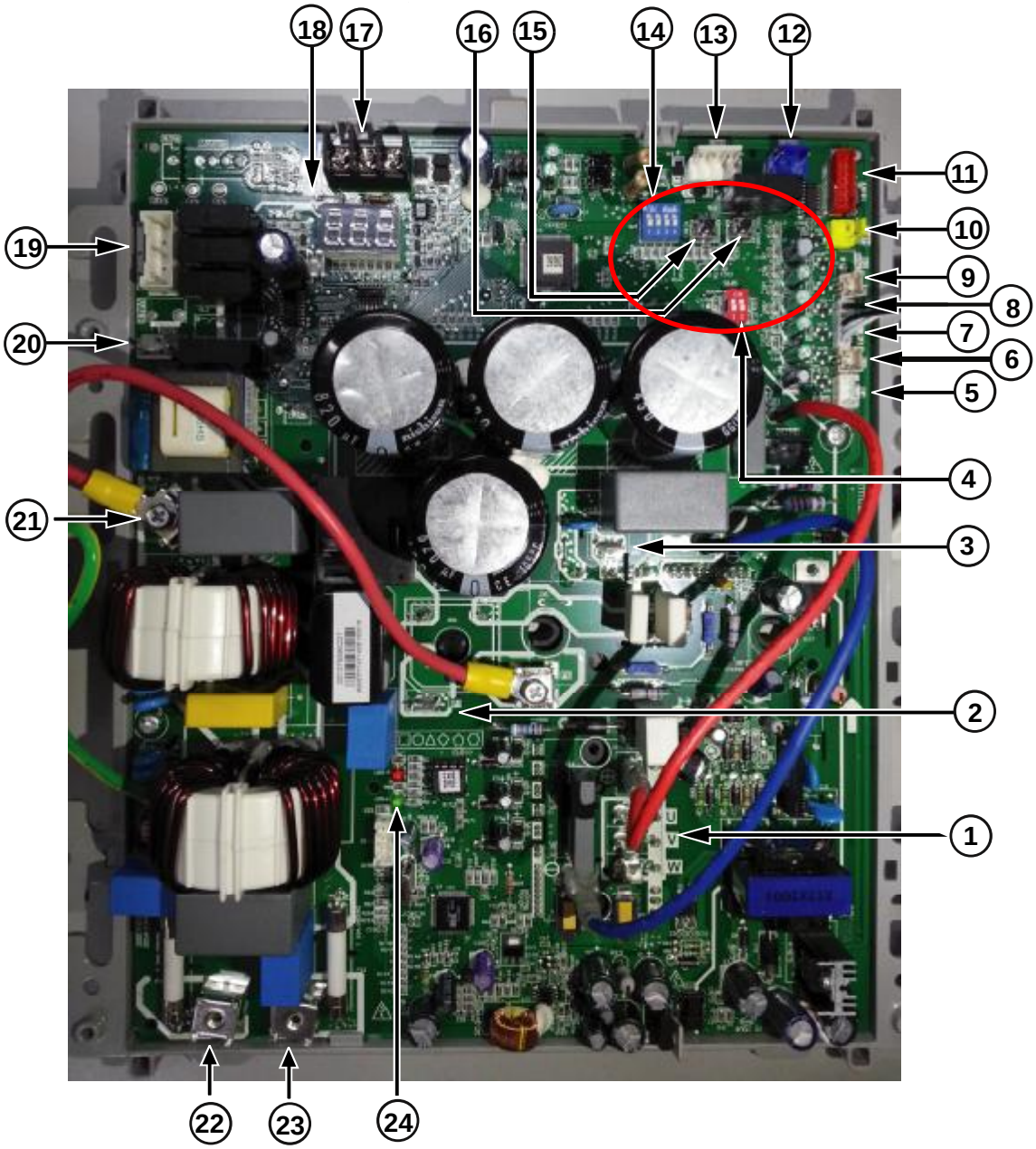

Function description for the corresponding position

No.	Content	No.	Content
1	Compressor iring terminal	13	Temp. controller connecting port
2	Reactor w iring terminal(connect a reactor betw een 2 and 3)	14	Function dial code SW4
3	Reactor w iring terminal(connect a reactor betw een 2 and 3)	15	Spot check button
4	Defrosting function dial codeSW5	16	Forced operation button
5	Pressure transducer port	17	Reserved
6	Air discharge temp.sensor port	18	Nixie tube display
7	Outdoor temp.sensor port(HP only)	19	Fan control port
8	Condenser temp.sensor port	20	Crankcase heating zone control terminal
9	Radiator temp.sensor port	21	Short w ire
10	High pressure sw itch port	22	Pow er supply connecting terminal
11	EXV drive port(HP only)	23	Pow er supply connecting terminal
12	Reversing valve port	24	Indicator lamp

For 48/60k model

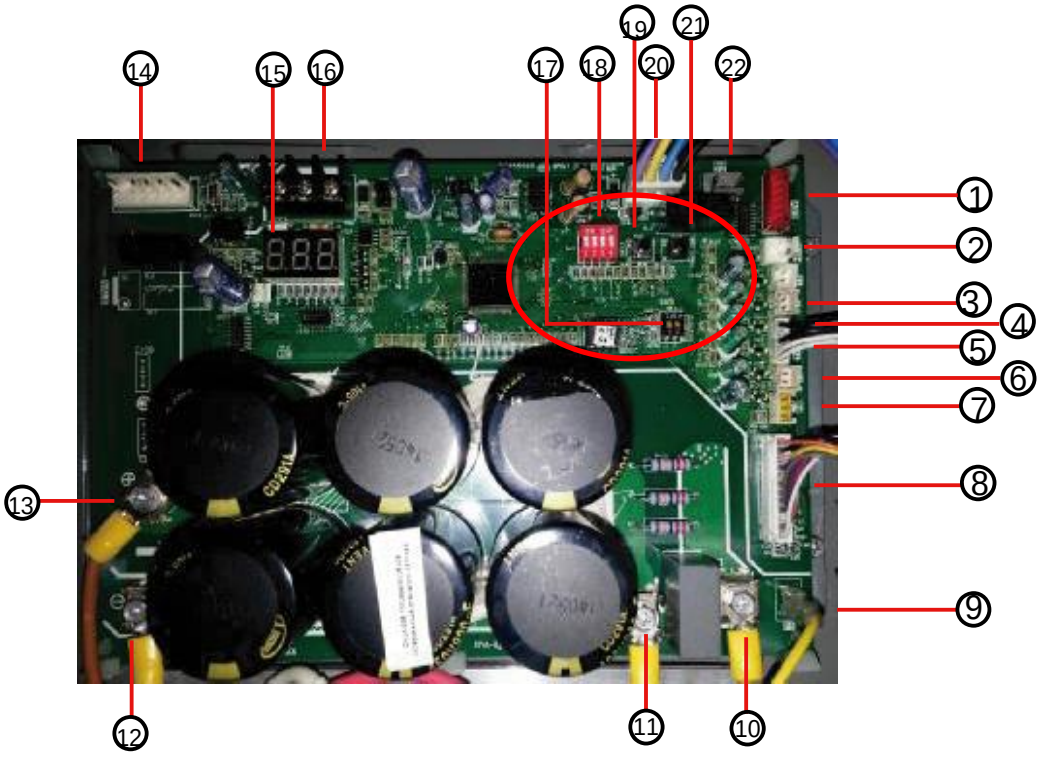

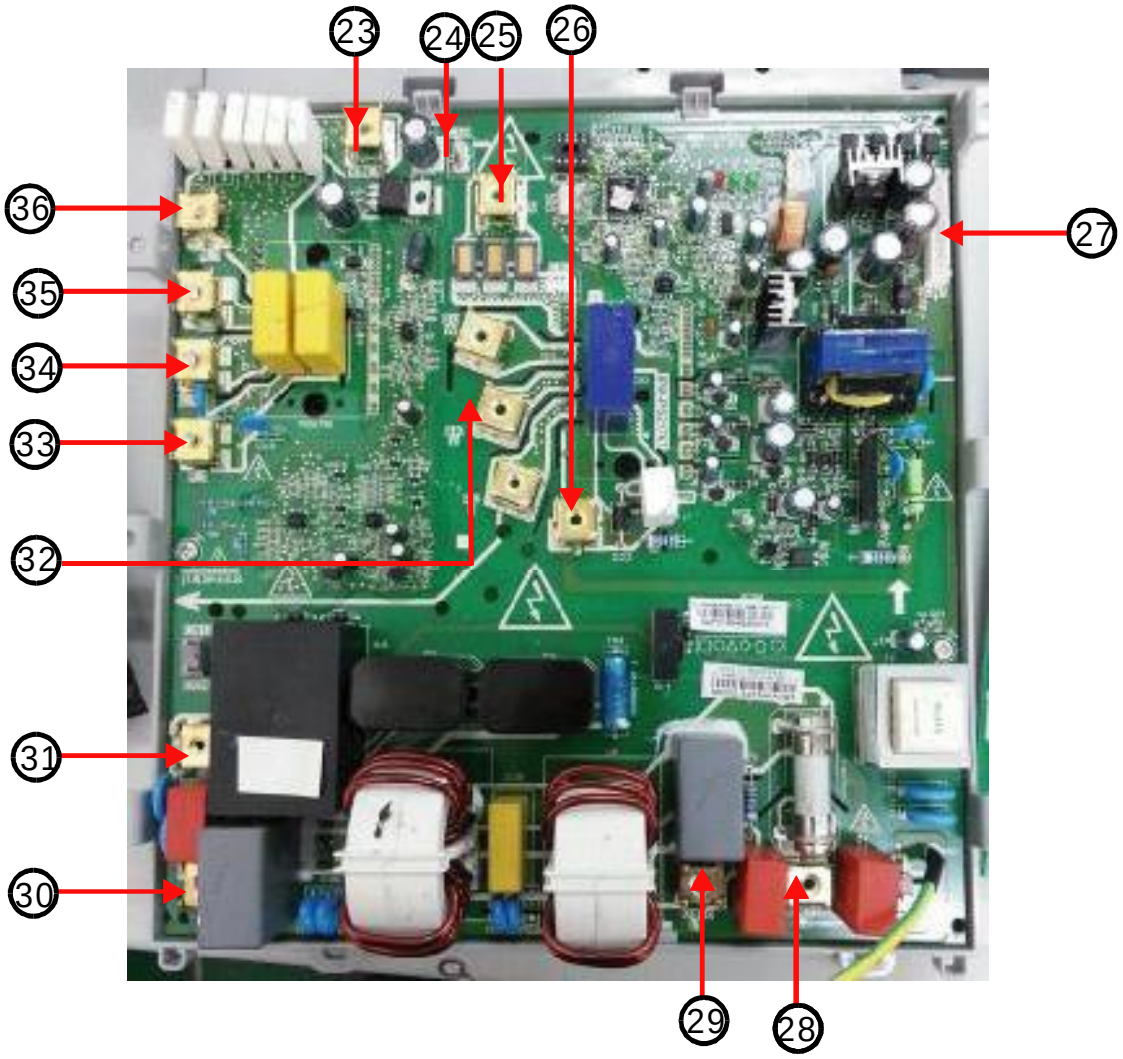

Function description for the corresponding position (For 48/60k model)

No.	Content	No.	Content
1	EXV driving port (HP only)	19	Point check button
2	High pressure switch port	20	Temp. controller connection port
3	Radiator temp. sensor port	21	Forced operation button
4	Condenser temp. sensor port	22	4-way valve port (HP only)
5	Outdoor temp. sensor port (HP only)	23	Connect the cathode of the rectifier bridge
6	Air discharge temp. sensor port	24	DC motor driving source(15V-P2)
7	Pressure transducer	25	The voltage between 25 and 26 is 380Vdc (Compressor is running)
8	Connection wire port between main boards	26	The voltage between 25 and 26 is 380Vdc (Compressor is running)
9	DC motor driving source(15V-P2)	27	Connection wire port between main boards
10	The voltage between 10 and 11 is 380Vdc (Compressor is running)	28	AC power supply input port
11	The voltage between 10 and 11 is 380Vdc (Compressor is running)	29	AC power supply input port
12	The voltage between 12 and 13 is 380Vdc (Compressor is running)	30	AC power supply output port
13	The voltage between 12 and 13 is 380Vdc (Compressor is running)	31	AC power supply output port
14	DC motor control port	32	Compressor connection terminal
15	Nixie tube display	33	The voltage between 33 and 36 is 380Vdc (Compressor is running)
16	Reserved	34	Reactor L1 wiring terminal
17	Defrosting function dial code SW5	35	Reactor L2 wiring terminal
18	Function dial code SW4	36	The voltage between 33 and 36 is 380Vdc (Compressor is running)

Troubleshooting

E4 (Temp. sensor fault)

Diagnosis	Handling
Cheak whether sensor T3/T4 /Tf/T5 are seated (T4 for Heat Pump only)	No → Reseat the sensor according to wiring nameplate
Yes ↓ Unplug the sensor, check whether the resistance of T3, T4 is in the range of TABLE1	No → Replace T3 or T4 sensor
Yes ↓ Unplug the sensor, check whether the resistance of TF, T5 is in the range of TABLE2	No → Replace Tf or T5 sensor
Yes ↓ Cheak whether report the same fault when re-powered on	Yes → Replace the mainboard

H0 (Communication fault in main control chip)

Diagnosis	Handling
Power off and re-power on to see whether it is normal	No → Replace the mainboard
Yes ↓ Go back to normal when electricity grid is normal.Then it is caused by electricity grid strong interference.	

H4/P6 (IPM module protection)

Diagnosis	Handling
Check whether the service valves are open	No → Open the service valves
Yes ↓ Check whether the compressor wiring is normal	No → Re-start after wiring correctly according to the wiring nameplate
Yes ↓ Check whether compressor insulation resistance is below 100kΩ	No → Replace compressor
Yes ↓ Check whether compressor coil is broken	Yes → Replace compressor
No ↓ Restart to check that high and low pressure difference is within 30PSI	No → Start after pressure balance or if system can't balance pressure in 10min, then the refrigerant system is fault
Yes ↓ Check whether discharge superheat is below 9°F after starting for 30 min	Yes → Throttle problem. Replace TXV of indoor unit in cooling,or,Replace EXV of outdoor unit in heating
No →	Replace the mainboard

P8 (Hurricane protection of the DC fan motor(for 48、60))

Diagnosis		Handling
Check whether motor wiring is reliably connected according to the nameplate	No →	Reseat the sensor according to wiring nameplate
↓ Yes		
Check whether there's 15VDC between P8 and P2	No →	If wiring is correct, replace the mainboard
↓ Yes		
Cheak whether the high speed operating of fan motor was caused by external force	Yes →	Avoid motor is influenced by the external force when stopping Re-power on when lock up
↓ No		
Cheak whether it reports P8 when stopping	Yes →	Replace the mainboard
↓ No		
Replace the motor		

Eb/E6 (DC fan motor fault)

Diagnosis		Handling
Check whether motor wiring is reliably connected according to the nameplate	No →	Reseat the wiring according to wiring nameplate
↓ Yes		
Check whether outdoor unit is sheltered	Yes →	remove impurities around outdoor unit
↓ No		
Check whether there's 15VDC Between P8 and P2	No →	Check whether wiring is correct, replace the mainboard
↓ Yes		
Replace the motor to check whether it is normal after restart?	No →	Replace the mainboard

E5(Voltage protection)

Diagnosis		Handling
Check whether the power supply voltage is between 208V-10% and 230V+10%	No →	Check power supply to troubleshoot problems
↓ Yes		
Check whether the power supply is reliably connected, whether the power supply wire diameter meets the requirements in the manual	No →	Replace power supply wire or connect power supply wire well
↓ Yes		
Cut off the power, and wait until electronic control indicator goes out, then power on to see whether the compressor operates normally	No →	Replace the mainboard
↓ Yes		
Test whether there's 380vDC on the terminals of CN31 when compressor is operating	No →	Replace the mainboard
↓ Yes		
Check whether there's high-power equipment nearby	Yes →	Separate high-power equipment and power supply
	No →	Caused by power supply voltage instantaneous fluctuation. Recover when power grid is normal

F4/P0 (High module radiator temperature (TF)protection)

Diagnosis		Handling
Check whether there's dust or fallen leaves influencing radiating	Yes →	Clean radiator duct
↓ No		
Check whether the radiator is damaged or badly fixed	Yes →	Fix the radiator. If radiator is damaged, replace it
↓ No		
Check whether the fan and blade can normally operate	No →	Replace motor or blade
↓ Yes		
Check whether the duct, including radiator, is blocked by debris	Yes →	Troubleshoot surrounding influence to the duct
↓ No		
Check whether resistance of Tf is in the range of TABLE2	No →	Replace Tf
↓ Yes		
Reseat Tf, power off and restart to ccheck whether there's the same fault	Yes →	Replace compressor driver

C5/E7 (Compressor discharge sensor(T5) is seated fault)

Diagnosis	Handling
Check whether the sensor is not seated on the discharge pipe	Yes → Fix discharge temp. sensor to the compressor discharge pipe, re-power on to start the unit
↓ No	
Check whether wiring of T3/T5 sensors and pressuretransduce (PT) are wired in accordance with wiring name plate	No → Wiring according to the nameplate and re-power on to start the unit
↓ Yes	
Check whether there're other heat sources around T3，T5	Yes → To troubleshoot influences by surrounding heat sources
↓ No	
Check whether resistance of T5 is in the range of TABLE2	No → Replace T5 temp. sensor
↓ Yes	
Power off and restart to see whether there's the same fault	Yes → Replace the mainboard

H3/P3 (Compressor over current protection)

Diagnosis	Handling
Check whether the service valves are open	No → Open the service valve
↓ Yes	
Check whether compressor wiring is normal	No → Wiring according to the nameplate and re-power on to start the unit
↓ Yes	
Check whether compressor insulation resistance is below 100kΩ	No → Compressor exchange
↓ Yes	
Restart after powering on to check that whether high and low pressure difference is within 30 PSI	No → Start after pressure balance or if system can't balance pressure in 10min, then the refrigerant system is fault
↓ Yes	
Power off and restart to check whether there's the same fault	Yes → Replace the mainboard

H5/P2 (Low pressure(PT) Protection in cooling)

Diagnosis	Handling
Check whether the service valves are open	No → Open the service valve
↓ Yes	
Check whether indoor unit is normal, valve is blocked or filter is sheltered, indoor airflow is normal	Yes → Exclude indoor unit fault reasons and restart
↓ No	
Check whether refrigerant system is lack of refrigerant according to subcooling in charge model (force mode)	Yes → Filling refrigerant and restart
↓ No	
Connect a pressure gage to suction valve and restart to check whether pressure is less than 45PSI	No → Replace pressure transducer
↓ No	
Power off and restart to check whether there's the same fault	Yes → Replace the mainboard

F5/Hb (High pressure(PT) protection in Heating)

Diagnosis	Handling
Check whether the service valves are open	No → Open the service valve
↓ Yes	
Check whether indoor unit is normal, valve is blocked or filter is sheltered, indoor airflow is normal	Yes → Exclude indoor unit fault reasons and restart
↓ No	
Check whether the indoor air inlet temp is over 86°F	Yes → Troubleshooting. e.g. indoor side E-heat or other heat sources are overheat）
↓ No	
Check whether outdoor side ambient temp. is over 86°F	Yes → Not applicable to start heating
↓ No	
Check whether outdoor electric expland valve is sticking.(C)	Yes → Replace electric expland valve of outdoor unit
↓ No	
Restart to check whether there's the same fault	No → Keep on operating
	Yes → Replace the mainboard

F1 (High pressure switch(HPS) fault)

Diagnosis	Handling
Check whether the service valves are open	No → Open the service valve
Yes ↓	
Whether high pressure switch resistance is normal (CLOSE is normal)	No → Replace high pressure switch
Yes ↓	
Stop the unit for an hour to check whether it reports the same fault	Yes → Replace the mainboard
	No → Keep operating

H8 (Pressure transducer(PT) fault)

Diagnosis	Handling
Check whether pressure transducer(PT) wiring is normal	No → Wiring according to the nameplate correctly and power on to restart
Yes ↓	
Check whether the voltage between gauging pressure thansducer(PT) white line and black line is between 0.5-4.5V when the system is on power	No → Replace pressure sensor
Yes ↓	
Restart to check whether there's the same fault	No → Keep on operating
	Yes → Replace the mainboard

F3/P5 (condensor coil temperature(T3) protection in cooling)

Diagnosis	Handling
Check whether the service valves are open	No → Open the service valve
Yes ↓	
Check whether T3/T5 are abnormal according to resistance	Yes → Replace sensors
No ↓	
Check whether outdoor unit fan is abnormal and whether the outdoor condenser coil is blocked by debris	Yes → Replace the fan and exclude the surrounding debris of heat exchanger
No ↓	
Check whether there's short circuit in air outlet and inlet side when the ambient temp. is high	Yes → Replace installation position or rectify the surrounding goods to avoid air return short circuit
No ↓	
Check refrigerant filling amount according to refrigerant filling mode	Yes → Refill enough amount of refrigerant
No ↓	
Restart to check whether there's the same fault	No → Keep operating
	Yes → Replace the mainboard

C4/C3 (T3 sensor is seated fault in cooling)

Diagnosis	Handling
Check whether the T3 sensor is seated to the condenser coil	Yes → reseat the sensor to the condenser coil and power on to restart
No ↓	
Check whether T3/T4 sensors and high pressure switch are wired according to wiring nameplate	No → Wiring according to the nameplate correctly and power on to restart
Yes ↓	
Check whether there're other heat sources around T3/T4	Yes → Exclude influence by the nearby heat sources
No ↓	
Check whether high pressure switch HPS is in fault(CLOSE is normal), whether the fan doesn't operate	Yes → Replace the fan and high pressure switch
No ↓	
Power off and restart to check whether there's the same fault	Yes → Replace the mainboard

E9 (EEPROM fault)

Diagnosis	Handling
Power off and re-power on to see whether it is normal	No → Re-insert the EEPROM Replace the mainboard
Yes ↓	
Caused by electricity grid strong interference. Go back to normal when electricity grid is normal	

H6/P4 (High compressor discharge temperature(T5) protection)

Diagnosis	Handling
Check whether the service valves are open	Open the service valve
Check whether discharge temp sensor T5 resistance is normal, refer to TABLE2	Replace air discharge temp. sensor
Check whether position of discharge temp. sensor is normal. whether there're other heat sources around	Troubleshooting problems and restart
Check whether refrigerant system is lack of refrigerant according to subcooling in charge model (force mode)	Filling refrigerant and restart
Whether compressor is normal（abnormal noise，abnormal vibration）	Replace compressor
In heating mode,check whether compressor gas return pressure is too low so that there's vacuum phenomenon	Replace EXV (valve sticking)
	Replace the mainboard

CE/P1 (High pressure switch(HPS)protection)

Diagnosis	Handling
Check whether the service valves are open	Open the service valve
Check whether outdoor unit is sheltered	remove impurities around outdoor unit
Check whether high pressure switch resistance is normal (COSL is normal)	Replace high pressure switch
Cooling mode refers to F3/P5 Heating mode refers to F5/Hb	

HH/PH (low discharge superheat protection)

Diagnosis	Handling
Check whether T3，T5 are abnormal (refer to sensor fault testing)	Replace sensors
Check whether indoor unit is normal, valve is blocked or filter is sheltered, indoor airflow is normal	Exclude indoor unit fault reasons and restart
In cooling mode,whether there's TXV or EV adjusting for indoor unit and the suction superheat is normal	1.Not applicable for piston 2.Adjust the TXV for full evaporation and superheat 3.To further adjust TXV swich to SW4-4"ON"
In heating mode, reporting fault To check whether outdoor fan is normal,outdoor unit is sheltered	Troubleshoot outdoor fan (replace the fan motor or fan blade)
Restart and heating, after 45min, check whether the external EV action is normal (If air discharge superheat)	Replace the mainboard
	Replace outdoor EV

C6/Pc (Reversing valve fault protection)

Diagnosis	Handling
Check whether the running model is normal (heating mode for Heat Pump)	Adjust control for system
Check whether reversing valve is normal for admand	Replace the reversing valve electric coil
Check whether reversing valve is normal for actor	Replace the reversing valve
Restart to Check whether there's the same fault	Kee operating
	kee operating

MD14U-001A
2020XXXXXX

GD Midea Heating & Ventilating Equipment Co., Ltd.
Is certified under the ISO 14001 International standard
for environmental management.
Certificate No.15912E10020ROL

GD Midea Heating & Ventilating Equipment Co., Ltd.
Is certified under the ISO 9001 International standard
for quality assurance.
No.01 100 019209

GD Midea Heating & Ventilating Equipment Co., Ltd.
Certificate of Occupational Health and Safety Management System
Certificate No.15912S20006ROL-1.